WARMING TRENDS®

OWNER'S GUIDE AND INSTRUCTION MANUAL

THANK YOU FOR YOUR PURCHASE!

SCAN TO VISIT
WARMING-TRENDS.COM

PATENTED
www.warming-trends.com/patents

SCAN TO SEE AN UPDATED
ICC-ES LIST

IMPORTANT PRODUCT WARNINGS

DANGER
FIRE OR EXPLOSION HAZARD

If you smell gas:

- **Shut off gas to the appliance.**
- **Extinguish any open flame.**
- **If odor continues, leave the area immediately.**
- **After leaving the area, call your gas supplier or fire department.**
- **Failure to follow these instructions could result in fire or explosion, which could cause property damage, personal injury, or death.**

WARNING
Do not store or use gasoline or other flammable vapors and liquids in the vicinity of this or any other appliances.

An LP-cylinder not connected for use shall not be stored in the vicinity of this or any other appliance.

WARNING: For Outdoor Use Only.
Installation and service must be performed by a qualified installer, service agency, or the gas supplier.

WARNING:
If the information in this is not followed exactly, a fire or explosion may result causing property damage, personal injury or loss of life.

DANGER!

CARBON MONOXIDE HAZARD

This appliance can produce carbon monoxide which has no odor.

Using it in an enclosed space can kill you.
Never use this appliance in an enclosed space such as a camper, tent, car, or home.

INSTALLER: Leave this user guide with the appliance.

CONSUMER: Retain this user guide for future reference.

The installer is responsible for using the correct fuel line sizing and/or regulation to provide gas within the specified minimum and maximum gas inlet pressures of the fire feature.

⚠ DANGER
RISQUE D'INCENDIE OU D'EXPLOSION

S'il y a une odeur de gaz :

- Coupez l'admission de gaz de l'arrareil.
- Éteindre toute flamme nue.
- Si l'odeur persiste, éloignez-vous de l'appareil et appelez immédiatement le fournisseur de gaz ou le service d'incendie.
- Si ces précautions ne sont pas respectées, cela pourrait provoquer un incendie ou une explosion, pouvant causer des dommages matériels, des blessures ou la mort.

⚠ AVERTISSEMENT

Ne pas entreposer ni utiliser de l'essence ni d'autres vapeurs ou liquides inflammables dans le voisinage de l'appareil, ni de tout autre appareil.

Une bouteille de propane qui n'est pas raccordée en vue de son utilisation, ne doit pas être entreposée dans le voisinage de cet appareil ou de tout autre appareil.

⚠ AVERTISSEMENT: Pour utilisation à l'extérieur seulement.
L'installation et l'entretien doivent être effectués par un installateur qualifié, une agence de service ou le fournisseur de gaz.

⚠ AVERTISSEMENT: Si les informations de ce manuel ne sont pas suivies à la lettre, un incendie ou une explosion peut en résulter et causer des dommages matériels, des blessures corporelles ou la mort.

⚠ DANGER!

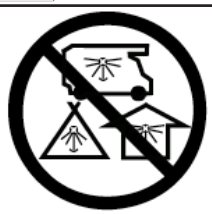

MONOXYDE DE CARBONE

Cette appareil peut produire du monoxyde de carbone, un gaz inodore.
L'utilisation de cet appareil dans des espaces clos peut entrainer la mort.
Ne jamais utiliser cet appareil dans un espace clos comme un véhicule de camping, une tente, une automobile, ou une maison.

Ne pas utiliser cet appareil s'il a été plongé, même partiellement, dans l'eau. Appeler un technicien qualifié pour inspecter l'appareil et remplacer toute partie du système de commande et toute commande qui a été plongée dans l'eau.

INSTALLATEUR: Laissez ce manuel ave l'appliance

CONSOMMATEUR: Conserves ce manuel pour référence ultérieure.

Il incombe à l'installateur d'utiliser le dimensionnement et / ou la régulation corrects de la conduite de carburant pour fournir du gaz dans les pressions d'entrée minimum et maximum spécifiées pour la fonction incendie.

TABLE OF CONTENTS

Important Product Warnings 2
Avertissements Importants Concernant les Produits 3
Certified Units 5
General Information 6
Code Requirements 7
Minimum and Maximum Gas Inlet Pressures 7
Location Considerations 8
Construction of Enclosure 9
Fire Feature Clearances Diagram 10
General Installation Instructions 12
Connection Diagrams
- Match Lit Ignition System 14
- 24 Volt Ignition System 18

Mercury Ignition System
- Fire Feature Clearances Diagram 11
- Installation Instructions 24
- Lighting Instructions 36

Warning Label 34
Media Installation 34
Operating Instructions 35
General Maintenance 38
Troubleshooting 39
Warranty 40
PROP 65 Warning 41
How to order Replacement Parts 42
Contact Us 42

CERTIFIED UNITS

Compliance with the following codes:
1. 2021, 2018, 2015, 2012, and 2009 *International Fire Code*® (IFC)
2. 2021, 2018, 2015, 2012, and 2009 *International Fuel Gas Code*® (IFGC)
3. 2020, 2018, 2015, 2012, and 2009 *Uniform Mechanical Code*® (UMC)*
4. 2020, 2015, and 2010 *Natural Gas and Propane Installation Code*®**

*Uniform Plumbing Code is a copyrighted publication of the International Association of Plumbing and Mechanical Officials

**Copyrighted publication of Canadian Standard Association

Compliance with the following standards:
1. ANSI Z21.97/CSA 2.41-2017 Outdoor Decorative Gas Appliances

Product: Outdoor Decorative Gas Fire Feature and Fireplaces

ICC-ES Report PMG-1213

MATCH LIT
Model # CFB60 NG/LP as match lit
Model # CDB60 XL NG/LP as match lit
Model # CFB84 XL NG/LP as match lit
Model # CFB100 XL NG/LP as match lit
Model # CFB120 NG/LP as match lit
Model # CFB180 NG/LP as match lit
Model # CFB240 NG/LP as match lit
Model # CFB290 NG/LP as match lit
Model # CFBL90 NG/LP as match lit
Model # CFBL110 NG/LP as match lit
Model # CFBL130 NG/LP as match lit
Model # CFBL150 NG/LP as match lit
Model # CFBL190 NG/LP as match lit
Model # CFBL210 NG/LP as match lit
Model # CFBL250 NG/LP as match lit
Model # CFBL270 NG/LP as match lit
Model # CFBL320 NG/LP as match lit
Model # CFBO-140 NG/LP as match lit
Model # CFB60 2XL NG/LP as match lit
Model # CFBH120 NG/LP as match lit
Model # CFBH160 NG/LP as match lit
Model # CFBH200 NG/LP as match lit
Model # CFBH240 NG/LP as match lit
Model # CFBH260 NG/LP as match lit
Model # CFBH300 NG/LP as match lit
Model # CFBH340 NG/LP as match lit
Model # CFBH420 NG/LP as match lit
Model # CFBT110 NG/LP as match lit
Model # CFBT170 NG/LP as match lit
Model # CFBT230 NG/LP as match lit
Model # CFBT290 NG/LP as match lit
Model # CFBT350 NG/LP as match lit
Model # CFBT410 NG/LP as match lit
Model # CFBT470 NG/LP as match lit
Model # CFBO180 NG/LP as match lit
Model # CFBO280 NG/LP as match lit
Model # CFBO-320 NG/LP as match lit
Model # CFBO360 NG/LP as match lit
Model # WTV40 NG/LP as match lit
Model # WTV60 NG/LP as match lit
Model # WTV84 XL NG/LP as match lit
Model # WTV120 NG/LP as match lit
Model # WTV120 NG/LP as match lit
Model # WTV180 NG/LP as match lit
Model # WTVES120 NG/LP as match lit
Model # WTVES180 NG/LP as match lit
Model # WT230 NG/LP as match lit
Model # WTV350 NG/LP as match lit

3V BATTERY OPERATED UNITS
Model # CFB60 NG/LP with 3VIK
Model # CFB120 NG/LP with 3VIK
Model # CFB240 NG/LP with 3VIK
Model # CFBL90LP NG/LP with 3VIK
Model # CFBL110LP NG/LP with 3VIK
Model # CFBL130LP NG/LP with 3VIK
Model # CFBL150LP NG/LP with 3VIK
Model # CFBL190LP NG/LP with 3VIK
Model # CFBL210LP NG/LP with 3VIK
Model # CFBL250LP NG/LP with 3VIK
Model # CFB60 2XL NG/LP with 3VIK
Model # CFBH120LP NG/LP with 3VIK
Model # CFBH160LP NG/LP with 3VIK
Model # CFBH200LP NG/LP with 3VIK
Model # CFBH240LP NG/LP with 3VIK
Model # CFBH260LP NG/LP with 3VIK
Model # CFBH300LP NG/LP with 3VIK
Model # CFBH340LP NG/LP with 3VIK
Model # CFBT110LP NG/LP with 3VIK
Model # CFBT170LP NG/LP with 3VIK
Model # CFBT230LP NG/LP with 3VIK
Model # CFBT290LP NG/LP with 3VIK
Model # CFBT350LP NG/LP with 3VIK
Model # CFBT410LP NG/LP with 3VIK
Model # CFBT470LP NG/LP with 3VIK
Model # CFBO180 NG/LP with 3VIK
Model # CFBO280 NG/LP with 3VIK
Model # CFBO360 NG/LP with 3VIK
Model # WTV60 NG/LP with 3VIK
Model # WTV120 NG/LP with 3VIK
Model # WTV180 NG/LP with 3VIK

24 VOLT PREMIUM ELECTRONIC IGNITION SYSTEMS - High Capacity
Model # CFB300 NG/LP with P24VIKHC
Model # CFBL320 NG/LP with P24VIKHC
Model # CFBH300 NG/LP with P24VIKHC
Model # CFBH340 NG/LP with P24VIKHC
Model # CFBH420 NG/LP with P24VIKHC
Model # CFBT350 NG/LP with P24VIKHC
Model # CFBT410 NG/LP with P24VIKHC
Model # CFBT470 NG/LP with P24VIKHC
Model # CFBO360 NG/LP with P24VIKHC
Model # WTV120 NG/LP with P24VIKHC

24 VOLT STANDARD ELECTRONIC IGNITION SYSTEMS - Standard Capacity
Model # CFB60 NG/LP with 24VIKSC
Model # CFB120 NG/LP with 24VIKSC
Model # CFB180 NG/LP with 24VIKSC
Model # CFB240 NG/LP with 24VIKSC
Model # CFBL90 NG/LP with 24VIKSC
Model # CFBL110 NG/LP with 24VIKSC
Model # CFBL130 NG/LP with 24VIKSC
Model # CFBL150 NG/LP with 24VIKSC
Model # CFBL190 NG/LP with 24VIKSC
Model # CFB60 2XL NG/LP with 24VIKSC
Model # CFBH120 NG/LP with 24VIKSC
Model # CFBH160 NG/LP with 24VIKSC
Model # CFBH200 NG/LP with 24VIKSC
Model # CFBT110 NG/LP with 24VIKSC
Model # CFBT170 NG/LP with 24VIKSC
Model # CFBO180 NG/LP with 24VIKSC
Model # CFBO280 NG/LP with 24VIKSC
Model # WTV60 NG/LP with 24VIKSC
Model # WTV120 NG/LP with 24VIKSC
Model # WTV180 NG/LP with 24VIKSC

24 VOLT STANDARD ELECTRONIC IGNITION SYSTEMS - High Capacity
Model # CFB240 NG/LP with 24VIKHC
Model # CFB290 NG/LP with 24VIKHC
Model # CFB300 NG/LP with 24VIKHC
Model # CFBL210 NG/LP with 24VIKHC
Model # CFBL250 NG/LP with 24VIKHC
Model # CFBL270 NG/LP with 24VIKHC
Model # CFBL320 NG/LP with 24VIKHC
Model # CFBH240 NG/LP with 24VIKHC
Model # CFBH260 NG/LP with 24VIKHC
Model # CFBH300 NG/LP with 24VIKHC
Model # CFBH340 NG/LP with 24VIKHC
Model # CFBH420 NG/LP with 24VIKHC
Model # CFBT230 NG/LP with 24VIKHC
Model # CFBT290 NG/LP with 24VIKHC
Model # CFBT350 NG/LP with 24VIKHC
Model # CFBT410 NG/LP with 24VIKHC
Model # CFBT470 NG/LP with 24VIKHC
Model # CFBO180 NG/LP with 24VIKHC
Model # CFBO280 NG/LP with 24VIKHC
Model # CFBO360 NG/LP with 24VIKHC
Model # WTV60 NG/LP with 24VIKHC
Model # WTV120 NG/LP with 24VIKHC
Model # WTV180 NG/LP with 24VIKHC

24 VOLT PREMIUM ELECTRONIC IGNITION SYSTEMS - Standard Capacity
Model # CFB60 NG/LP with P24VIKSC
Model # CFB120 NG/LP with P24VIKSC
Model # CFB180 NG/LP with P24VIKSC
Model #CFB240 NG/LP with P24VIKSC
Model # CFB290 NG/LP with P24VIKSC
Model # CFBL90 NG/LP with P24VIKSC
Model # CFBL110 NG/LP with P24VIKSC
Model # CFBL130 NG/LP with P24VIKSC
Model # CFBL150 NG/LP with P24VIKSC
Model # CFBL190 NG/LP with P24VIKSC
Model # CFBL210 NG/LP with P24VIKSC
Model # CFBL250 NG/LP with P24VIKSC
Model # CFBL270 NG/LP with P24VIKSC
Model # CFB60 2XL NG/LP with P24VIKSC
Model # CFBH120 NG/LP with P24VIKSC
Model # CFBH160 NG/LP with P24VIKSC
Model # CFBH200 NG/LP with P24VIKSC
Model # CFBH240 NG/LP with P24VIKSC
Model # CFBH260 NG/LP with P24VIKSC
Model # CFBT110 NG/LP with P24VIKSC
Model # CFBT170 NG/LP with P24VIKSC
Model # CFBT230 NG/LP with P24VIKSC
Model # CFBT290 NG/LP with P24VIKSC
Model #CFBO180 NG/LP with P24VIKSC
Model #CFBO280 NG/LP with P24VIKSC
Model # WTV60 NG/LP with P24VIKSC
Model # WTV120 NG/LP with P24VIKSC
Model # WTV180 NG/LP with P24VIKSC

MERCURY IGNITION
Model # CFB60 NG/LP with MERC
Model # CFDB60 XL NG/LP with MERC
Model # CFB84 NG/LP with MERC
Model #CFB120 NG/LP with MERC
Model # CFB140 NG/LP with MERC
Model # CFB180 NG/LP with MERC
Model # CFB290 NG/LP with MERC
Model # CFBH-120 NG/LP with MERC
Model # CFBH-160 NG/LP with MERC
Model # CFBH-200 NG/LP with MERC
Model # CFBH-240 NG/LP with MERC
Model # CFBL-90 NG/LP with MERC
Model # CFBL-110 NG/LP with MERC
Model # CFBL-130 NG/LP with MERC
Model # CFBL-150 NG/LP with MERC
Model # CFBL-170 NG/LP with MERC
Model # CFBL-190 XL NG/LP with MERC
Model # CFBL-210 NG/LP with MERC
Model #CFBL-250 NG/LP with MERC
Model # CFBL-270 NG/LP with MERC
Model # CFBO-140 NG/LP with MERC
Model # CFBO-180 NG/LP with MERC
Model # CFBO-280 NG/LP with MERC
Model # CFBO-320 NG/LP with MERC
Model # CFBT-110 NG/LP with MERC
Model # CFBT-170 NG/LP with MERC
Model # CFBT-230 NG/LP with MERC
Model # CFBT-290 NG/LP with MERC
Model # CFBT-350 NG/LP with MERC
Model # WTV60 NG/LP with MERC
Model # WTV84 NG/LP with MERC
Model # WTV120 NG/LP with MERC
Model # WTV180 NG/LP with MERC
Model # WTVCT140 NG/LP with MERC
Model # WTVOL110 NG/LP with MERC
Model # WTVT230 NG/LP with MERC
Model # WTVT350 NG/LP with MERC

High Capacity (HC) ignitions may be substituted for Standard Capacity (SC) ignitions.

GENERAL INFORMATION

This Owner's Guide and User Guide contains critical information for the safe installation and operation of your Mercury Ignition. **You must read this user guide in its entirety prior to installation and/or operation. Failure to follow these instructions may result in property damage, personal injury, or death.**

WARNING:
HOT! DO NOT TOUCH.
SEVERE BURNS MAY RESULT.
CLOTHING IGNITION MAY RESULT.

- **Young children should be carefully supervised when they are in the area of the appliance.**
- **Clothing or other flammable materials should not be hung from the appliance or placed on or near the appliance.**
- **Children and adults should be alerted to the hazards of high surface temperatures and should stay away to avoid burns or clothing ignition.**

Installation and service must be performed by a qualified installer, service agency, or the gas supplier. It is the installer's responsibility to read thoroughly before installing or servicing this equipment to ensure a safe installation and to educate the end user as to proper operation.
Warming Trends is not responsible for damage due to improperly installed or operated units. Installers must leave this user guide with the end user. Instructions are updated as needed, and it is the installer or owners' responsibility to periodically review Warming Trends website for applicable updates (www.Warming-Trends.com.) Please keep this with your important papers.

WARNING:
Do not use appliance if any part has been under water. Immediately call a qualified service technician to inspect the appliance and to replace any part of the control system and any gas control that has been under water.

WARNING:
DO NOT USE OXYGEN MIXERS WITH YOUR WARMING TRENDS APPLIANCE. Mixers may create leakage in the cavity of the feature and could cause fire or explosion which could cause property damage, personal injury, or death.

WARNING:
Product is not intended to be used to burn wood or other combustibles. Solid fuels shall not be burned in the appliance.
Do not put any combustible materials into the fire feature.

WARNING:
Only use Liquid Propane or Natural Gas as specified for your Warming Trends appliance or burner.
Do not use an alternative fuel.

CODE REQUIREMENTS

It is the responsibility of the installer to consult with the local municipality and to **FOLLOW ALL LOCAL CODES** concerning the installation and operation of the fire feature.

For systems with Mercury Ignition Systems:

When the appliance is for connection to a fixed piping system, the installation must conform with local codes, or in the absence of local codes with the *National Fuel Gas Code,* ANSI Z223.1·NFPA54; *National Fuel Gas and Propane Installation Code,* CSA B149.1; or *Propane Storage and Handling Code,* CSAB149.2, as applicable.

For systems with electronic ignition systems:

The appliance when installed, must be electrically grounded in accordance with local codes, or in the absence of local codes, with the *National Electrical Code*, ANSI/NFPA 70; or the *Canadian Electrical Code*, CSA C22.1, if applicable.

MINIMUM AND MAXIMUM GAS INLET PRESSURES

The installer is responsible for using the correct fuel lines and/or regulation to provide gas to the fire feature within the specified minimum and maximum gas inlet pressures below:

GAS INLET PRESSURES

MATCH LIT	**Minimum**	**Maximum**
Natural Gas	3.5" W.C. (.8718 Kpa)	7.0" W.C. (1.7436 Kpa)
Liquid Propane	11.0" W.C. (2.7399 Kpa)	13.0" W.C. (3.2381 Kpa)
MERCURY	**Minimum**	**Maximum**
Natural Gas	3.5" W.C. (.8718 Kpa)	10.0" W.C. (2.4908 Kpa)
Liquid Propane	11.0" W.C. (2.7399 Kpa)	13.0" W.C. (3.2381 Kpa)
3V - 3VIK	**Minimum**	**Maximum**
Natural Gas	4.5" W.C. (1.1209 Kpa)	10.0" W.C. (2.4908 Kpa)
Liquid Propane	11.0" W.C. (2.7399 Kpa)	13.0" W.C. (3.2381 Kpa)
STANDARD - 24VIKHC	**Minimum**	**Maximum**
Natural Gas	3.0" W.C. (.7472 Kpa)	5.0" W.C. (1.2454 Kpa)
Liquid Propane	8.0" W.C. (1.9927 Kpa)	12.0" W.C (2.989 (Kpa)
PREMIUM - P24VIKSC, P24VIKHC	**Minimum**	**Maximum**
Natural Gas	3.5" W.C. (.8718 Kpa)	14.0" W.C. (3.4872 Kpa)
Liquid Propane	8.0" W.C. (1.9927 Kpa)	14.0" W.C. (3.4872 Kpa)

LOCATION CONSIDERATIONS

All appliances, match lit kits, spark ignition, and electronic ignition systems are designed and intended for outdoor use only.

All appliances must have a gas shutoff located outside of the appliance to allow for emergency shutoff and maintenance.

Select a location where the appliance can be attended during operation. Never leave an operating appliance unattended or by someone not familiar with its operation or emergency shutoff locations.

Appliances may create very high temperatures - combustibles must be located far enough away that there is no risk of ignition.

IMPORTANT: It is recommended that material such as granite, marble, or other dense stone be kept an appropriate distance away from flame due to risk of cracking. Manufacturer is not responsible for damage to any enclosure material for any reason.

FIRE PIT CLEARANCES

- 36" horizontally from any combustible structure or materials.
- Overhead clearance should be a minimum of 120" from combustible structures or materials.
- Choose a location that allows easy access for installation and maintenance of the fire feature.
- Pick a location that allows sufficient horizontal room to enjoy the appliance while allowing a safe distance from the heat and flame.
- Always consult with local municipality regarding any local code requirements.
- See Clearance Diagram starting on page 10.

The enclosure must be constructed on a stable surface and must be level.

For models with electronic ignitions, the control/valve box must be above grade with adequate drainage to pre4vent water exposure to the controls inside the box. Additionally, the weight of the burner system must not be supported by or rest upon the control valve/box. A plate, pan, or other surface should be used to support the weight of the burner system.

Blocks, bricks, or metal collars (L-brackets) can be used to build a support for the system, plate, or pan. Larger plates and pans should include additional support to avoid bowing. A center support (using blocks, bricks or other non-combustible materials) is recommended for round or square plates and pans over 30" and for rectangular plates or pans over 40".

Warming Trends Burners, Ignitions, Media, and other Accessories may be installed in Outdoor Fire Places. The clearances, materials, venting, and construction standards for Outdoor Fire Places may be determined by Local or National Codes. Such Codes may incorporate or defer to the recommendations or requirements of the Outdoor Fire Place Manufacturer or the party designing the Fire Place. It is the installer's responsibility to ensure conformance to applicable local standards.

CONSTRUCTION OF ENCLOSURE

If located on the vessel, key valve should be mounted below the plate and through the side wall of the vessel. Key valves may be mounted remotely or on adjacent surfaces.

Always use proper materials and construction for gas supply, power, and enclosure. Materials must be non-combustible in both initial installations as well as over time.

For electronic ignition models requiring a power supply - a qualified, licensed electrician must install power supply. The unit may be hardwired or an outdoor NEMA rated GFCI Receptacle outlet can be installed on the interior of the enclosure above grade to supply power to system.

The interior space of the enclosure cannot be filled with any material (gravel, crushed rock, concrete, etc.).
The appliance assembly should be recessed 4"- 6" from the top of the enclosure to protect flame from excessive wind. Some conditions may require deeper recession.

It is the responsibility of the installer to provide proper installation to allow for easy accessibility for service and/or repairs. Installer must not build capstone inner ledge over outer lip of plates or pans (unless access panel door or alternate access is incorporated). Building capstone inner ledge over outer edge of plates or pans will impede access to system and result in the need to crack or remove capstones to gain access. Warming Trends is not responsible for damage to enclosure for any reason whatsoever.

Minimum ventilation requirement: incorporate venting on at least 2 opposing sides (two (2) areas of venting) at a minimum of 18 sq inches of venting each. Installation of the vents in the mid-to-lower area of the enclosure is recommended. Ventilation allows for heat and/or residual fuel to escape. Failure to properly vent enclosure may result in appliance overheating or explosion. Overheating could lead to heat damage to internal components. Some enclosures may require more ventilation based upon material, size, and extended use. Always consult with local municipality regarding any code requirements.

Ready-to-Finish Kits come with Fire Feature Vent Kit (FPVK). Vents do not come pre-installed on Ready-to-Finish Kit as placement and installation depends on veneer. Vents to be installed by contractor on site.

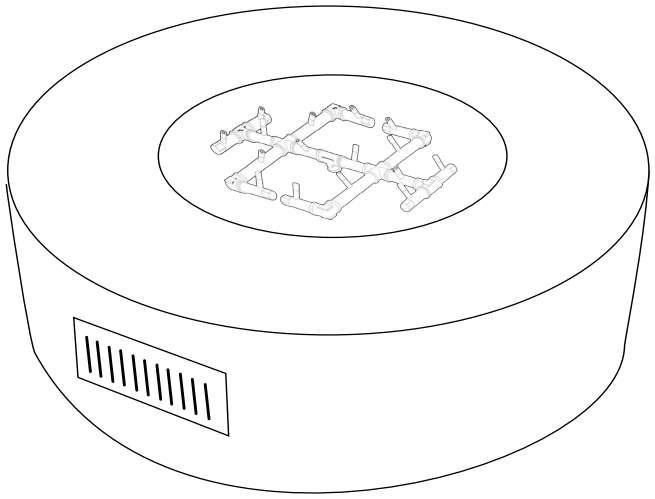

WARNING:
All appliances must have a gas shutoff on the outside of the fire feature to allow for emergency shut off and maintenance.

WARNING:
For electronic ignition models, there must be an electrical shutoff (wall switch or breaker) on the exterior of the appliance or on adjacent structure to allow for emergency shutdown and maintenance. Verify correct power supply.

WARNING:
These instructions do not apply to vessels or appliances with self contained propane gas supply systems. Appliances or vessels with self contained propane gas supply systems have additional specific requirements which must be identified and met by the vessel installer or manufacturer. Please consult with a qualified installer for guidance and required installation procedures.

FIRE FEATURE CLEARANCES DIAGRAM

Vertical clearance of 120" from burner to combustible structure or materials is required. Horizontal or lateral clearance of 36" between edge of burner and combustible structure or materials is required.

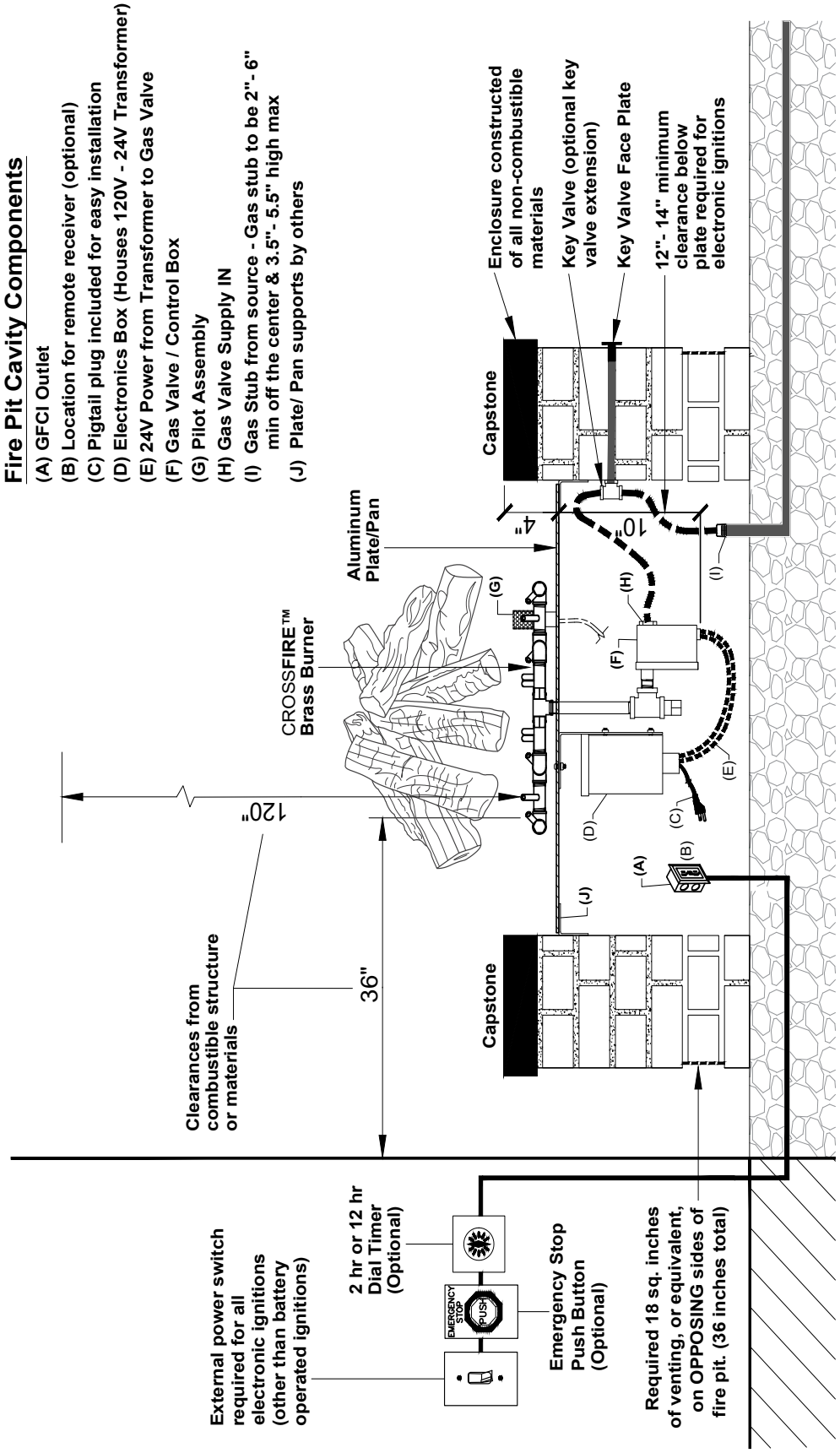

FIRE FEATURE CLEARANCES DIAGRAM - MERCURY IGNITION SYSTEM

Vertical clearance of 120" from burner to combustible structure or materials is required. Horizontal or lateral clearance of 36" between edge of burner and combustible structure or materials is required.

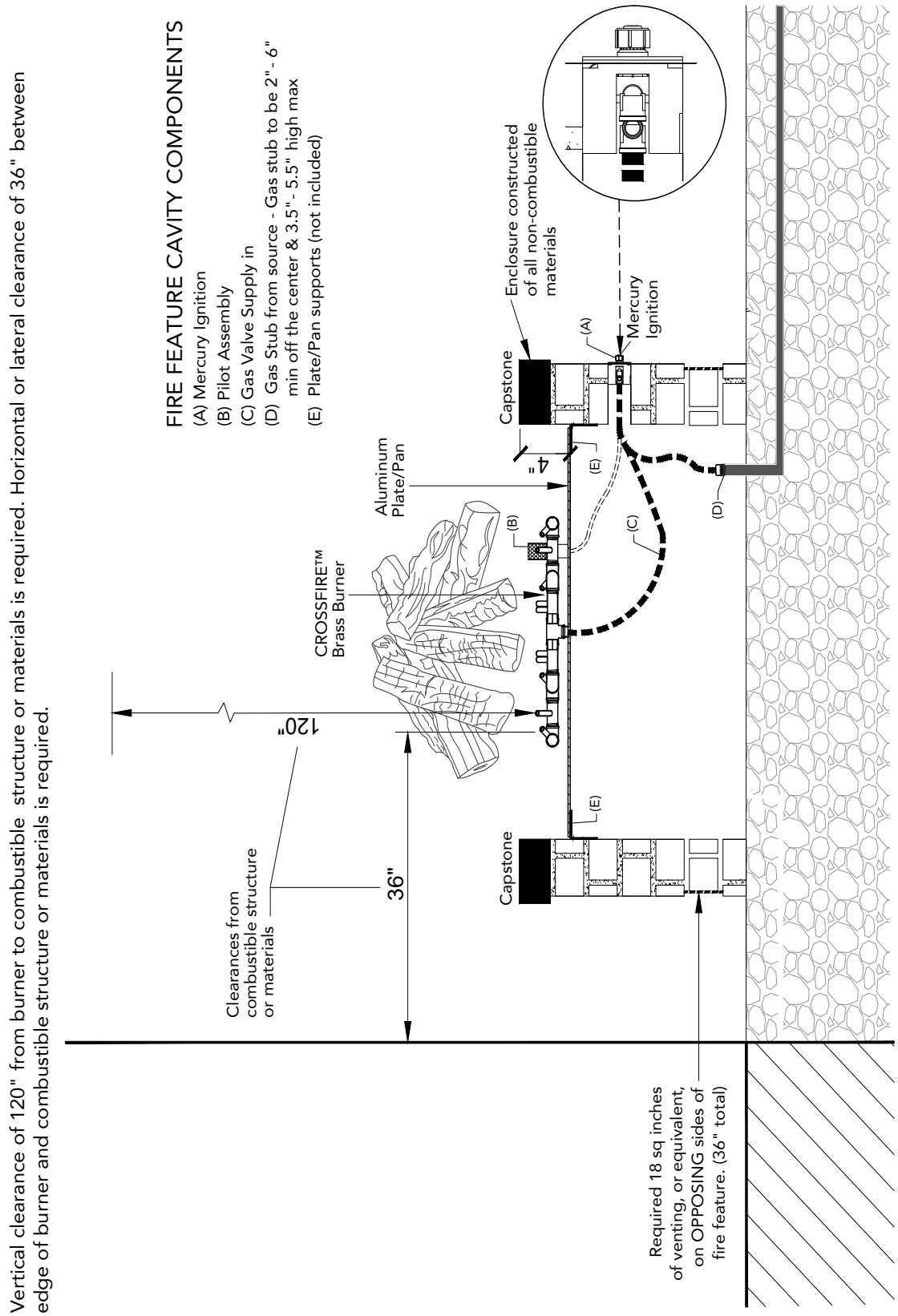

Use only joint compound, thread sealant, or tape specific to gas use that is resistant to all gases. Apply joint compound, thread sealant or tape to all male pipe fittings only and **DO NOT USE ON FLARED END OF FLARED FITTINGS.** Be sure to tighten every joint securely.

Ignition systems are recommended on any burner over 300K BTUs. If you are lighting manually be sure to maintain a minimum safe distance to avoid property damage, personal injury, or death. Please refer to match lit instructions.

1. Verify gas supply matches burner type.
2. Verify gas inlet pressure is within the specified minimum and maximum pressures. Consult Gas Inlet Pressures on page 7.
3. Purge gas lines of air, water, and debris.
4. Perform all leak tests with leak detector or leak reactant on main gas supply and repair leaks as necessary. Turn off gas supply.
5. For models that include electronic ignitions, be sure to have a qualified electrician install proper power supply following all local codes.
6. Inspect flex line(s) for punctures or breaks in line(s).
7. **Make sure the key turns in the key valve before installing.** Use only your hand to turn the gas key valve. Never use tools. If the key valve will not turn by hand, don't try to repair it. Force or attempted repair may cause a fire or explosion.
8. **Refer to Connection Diagrams starting on page 10 for applicable gas connections.**
9. Position burner safely with access to all gas connections for testing. Position burner to allow sufficient clearance from the fire pit sides and capstone to avoide damage.
10. Turn on gas supply to perform repeat leak tests on main gas supply and all connections to appliance and repair as needed.
11. Do not use appliance if there is evidence of leaking gas. If leak is suspected, turn off main gas supply immediately.
12. For appliances for use with a fixed fuel piping system and equipped with an appliance gas pressure regulator, the appliance and its individual shutoff valve must be disconnected from the gas supply piping system during any pressure testing of that system at test pressure in excess of ½ psi (3.5kPa).

    The appliance must be isolated from the gas supply piping system by closing its individual manual shutoff valve during any pressure testing of the gas supply piping system at test pressures equal to or less than ½ psi (3.5 kPa).
13. Ignite burner. See applicable ignition instructions within Operating Instructions, page 35.

    After installation of any jet or end jet or the performance of any other service, the burner must be tested for leaks.
14. Electronic ignitions can either be hard wired into main power supply or plugged into a location-specific outlet/receptacle per local codes. **The electrical supply must be connected to an ON/OFF switch that is external to the pit.** Remote controls, emergency stops, and dial timers are optional add-ons.
15. Once appliance is lit, perform leak test on all gas connections and repair as needed.
16. Turn off appliance and allow to cool.
17. Set appliance into properly constructed, level, non-combustible enclosure. The enclosure must be on a stable surface. The weight of the appliance must be supported by the plate or pan and not by any control box or gas valve. Blocks, bricks, metal collars, or L-brackets can be used to build a support ledge for the system plate or pan. Control boxes and gas valves must be above grade with adequate drainage to prevent water damage. Installer is responsible for making sure there is enough space in the cavity for any electronics and piping. **The lower cavity of the enclosure cannot be filled with any material (i.e. gravel, crushed rock, concrete, etc).** The fire pit assembly should be recessed 4" to 6" from the top of the enclosure to protect flame from excessive wind and to allow coverage of burner. **See Clearances Diagram on previous page.**
18. To allow for regular maintenance, any capstone materials should not overhang the interior edge of the fire pit. See **Clearances Diagram** starting on page 10 for placement. Warming Trends® is not responsible for any damages to the capstone.
19. Venting is required to avoid heat damage to internal components and to allow airflow in case of gas pooling. Incorporate 1 vent on at least two opposing sides (two [2]vents total) at a minimum size of 18 sq inches each for 36" total (example: 3"x 6"). Installation of the vents in the mid to lower area of the enclosure is recommended. Some enclosures may require more ventilation based on material, size, and extended use. Ready-to-Finish Kits come with Fire Pit Vent Kit (FPVK). Vents do not come pre-installed on Ready-to-Finish. Fire Pit Vent Kits must be installed on site.
20. Only use fire rated media (glass, lava rock, log sets, etc.) approved for use with high temperatures that have been manufactured for specific use in fire features. Never use any material for media that is non-porous and holds moisture such as gravel, pebbles, river rock, etc. Such material, when heated, may cause the trapped moisture to boil, fracture unexpectedly and/or explode and which could cause personal injury, damage, or death.

21. To avoid dust and clogs getting into the system, do not dump the media over the burner. Place the media onto the plate or pan. **Burner should be covered by approved media up to but no more than ½" above the jets. Excessive media coverage may cause back pressure and dangerous pooling of gas which can result in explosion which could cause property damage, personal injury, or death.**
22. Do not cover the ignition pilot assembly or wind cage more than halfway with any form of media. Do not place ceramic logs too close to the pilot assembly as this may cause excessive heat and system failure that is not covered by warranty.
23. Complete final verification of correct operation and lighting.
24. Review instruction manual with end user and instruct end user not to change/modify fire pit or media in any way.

LEAVE THIS CONNECTION DIAGRAM WITH END USER.

MATCH LIT SYSTEM: CONNECTION DIAGRAMS

249K BTU SYSTEMS AND BELOW

1. LOCATE FK1

Parts include Whistle-Free Flex Line, key valve, escutcheon plate, and keys.

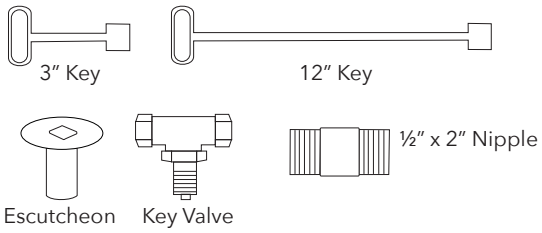

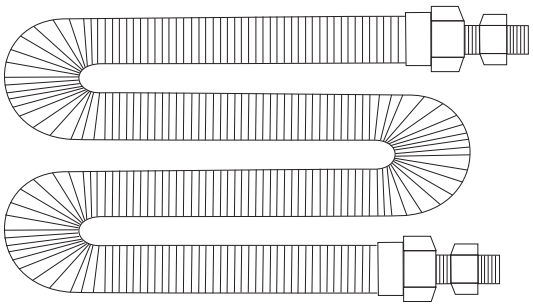
Whistle-Free Flex Line

2. REMOVE FLARED FITTINGS FROM WHISTLE-FREE FLEX LINE

Removing flared fittings first makes installation easier.

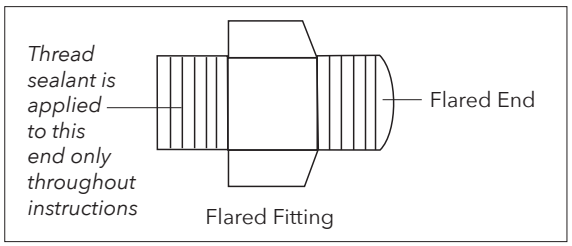

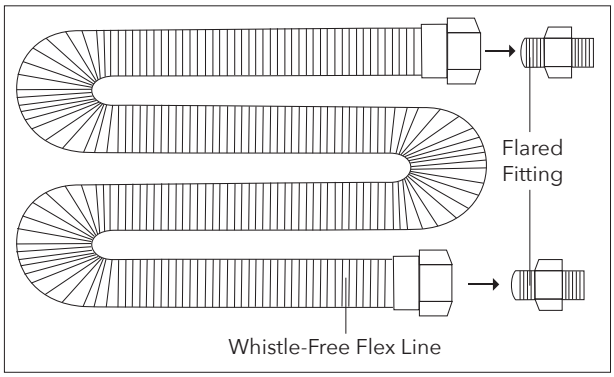

3. CONNECT TO ½″ X 2″ NIPPLE, THEN TO COUPLING

(FK1) Connect one ¾″ Flared Fitting removed in Step 2 to ½″ x 2″ Nipple fitting provided by inserting ½″ x 2″ Nipple into interior threads of the Flared Fitting. Tighten.

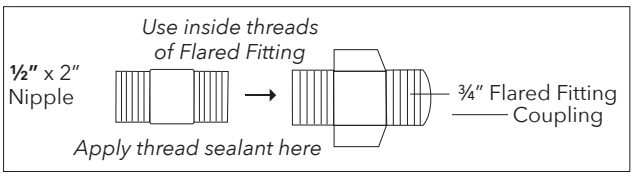

Then, connect the ½″ x 2″ Nipple fitting into the coupling located on the bottom of the aluminum plate. Tighten.

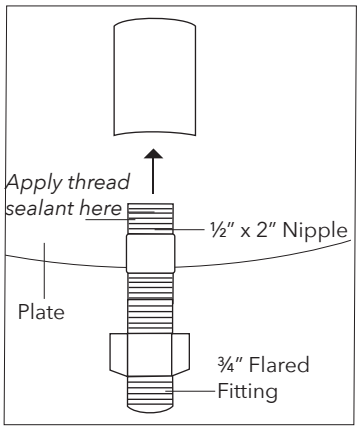

4. CONNECT WHISTLE-FREE FLEX LINE

(FK1) Connect the Whistle-Free Flex Line to the Flared Fitting previously attached to the coupling on the bottom of the aluminum plate.

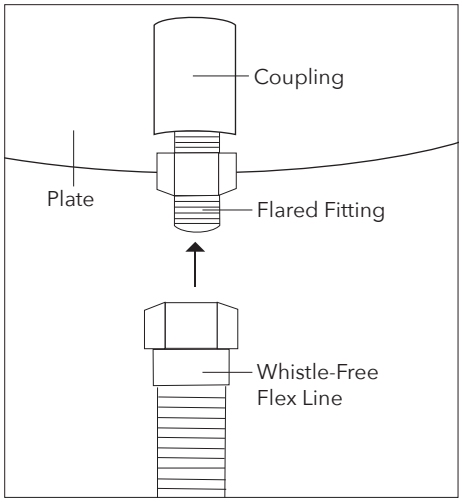

5. LOCATE 2ND FLARED FITTING AND CONNECT TO KEY VALVE

(FK1) Locate the second Flared Fitting removed in Step 2 and connect into the Key Valve, placing the non-flared end into the key valve. Tighten.

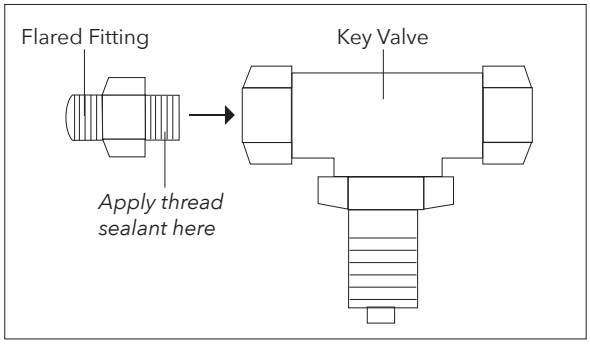

6. CONNECT FLEX LINE WITH KEY VALVE

(FK1) Connect the Whistle-Free Flex Line to the Flared Fitting that is now connected to the Key Valve. Connect Escutcheon Plate to Key Valve through vessel wall. Tighten.

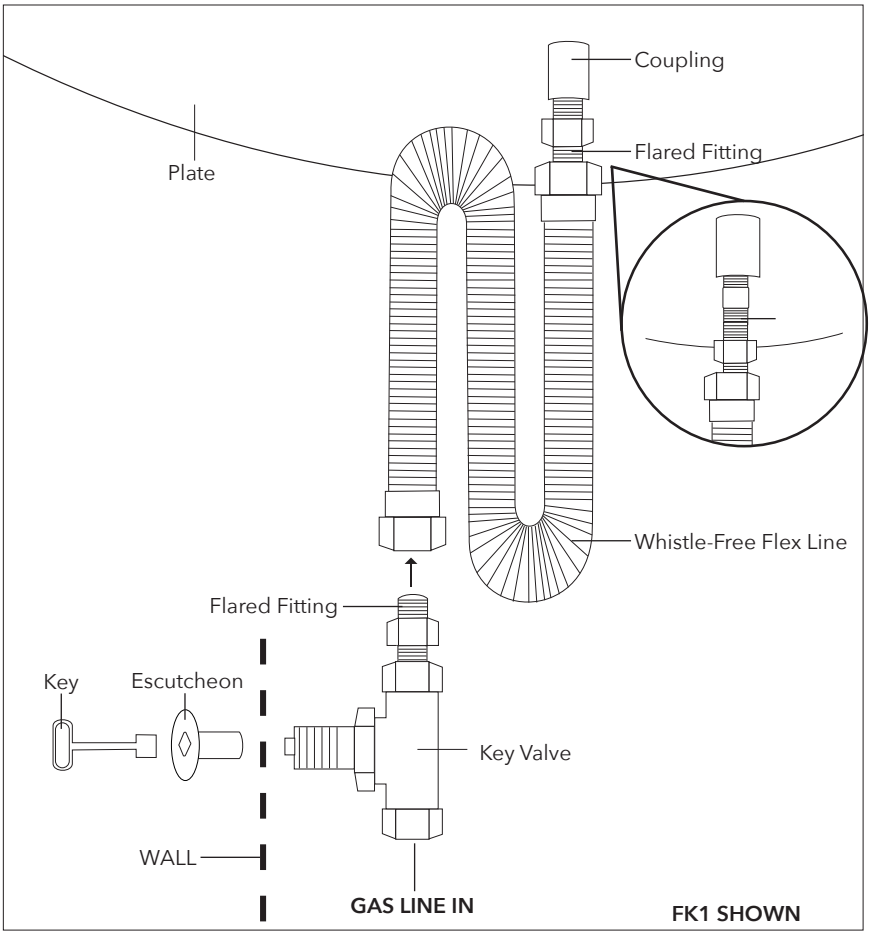

250K - 300K+ BTU SYSTEMS

1. LOCATE FK2

Parts include two Whistle-Free Flex Lines, key valve, escutcheon plate, and keys.

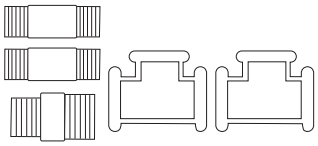

(2) ¾" x 3" Nipple
(2) ¾" Tees
(1) ¾" x ½" MM Reducer Fitting

YOUR INSTALLATION MAY NOT REQUIRE ALL PARTS.

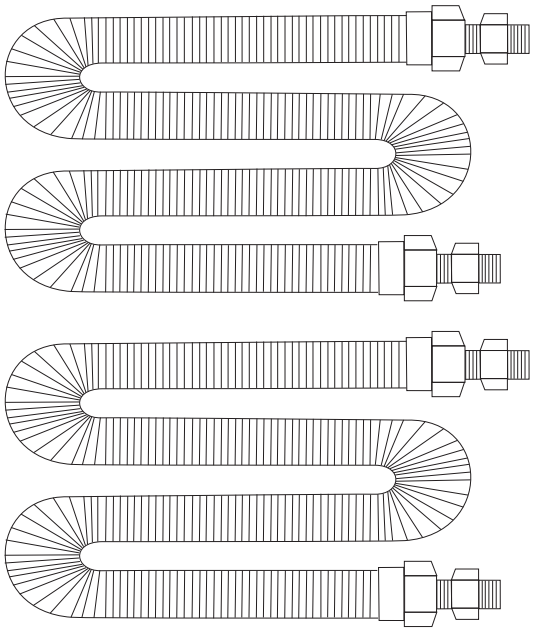

Whistle-Free Flex Lines

2. REMOVE FLARED FITTINGS FROM WHISTLE-FREE FLEX LINES

(FK2) Removing flared fittings first makes installation easier.

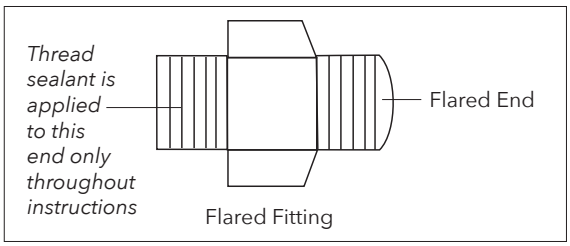

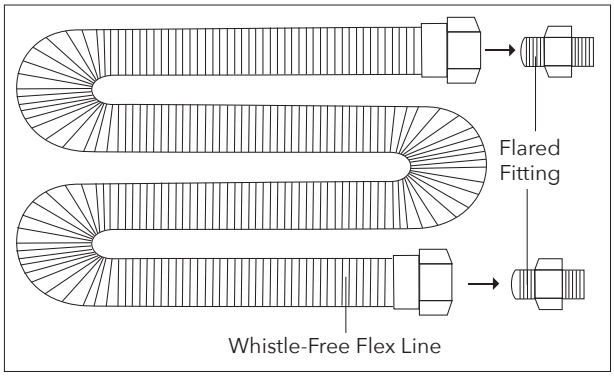

3. CONNECT TO COUPLING

DO NOT USE THE 2ND 3/4" X 3" NIPPLE WITH THIS INSTALL.

Connect ½" x ¾" Reducing Fitting to ½" Coupling located on the bottom of the aluminum plate.

Then connect ¾" Tee to ½" x ¾" Reducing Fitting.

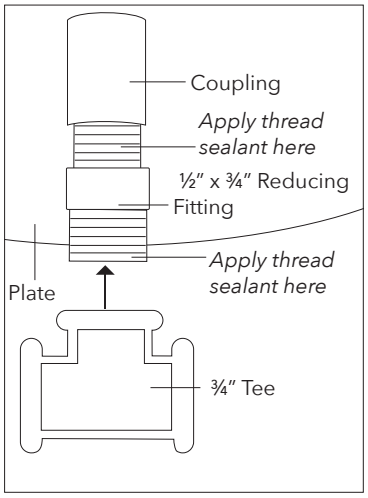

3A. CONNECT TO COUPLING

DO NOT USE THE ½" X ¾" REDUCER FITTING WITH THIS INSTALL.

Connect ¾" x 3" Nipple to ¾" Coupling located on the bottom of the aluminum plate.

Then connect ¾" Tee to ¾" x 3" Nipple.

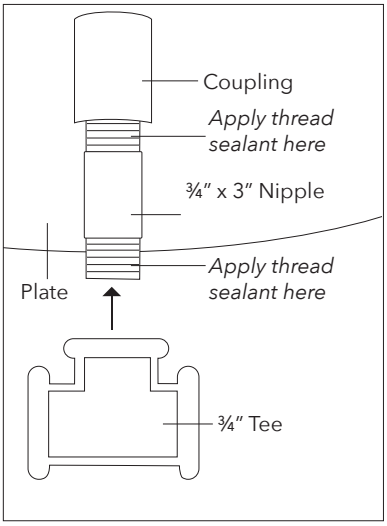

4. CONNECT FLARED FITTINGS TO ¾" TEE

(FK2) Connect Flared Fittings to ¾" Tee.

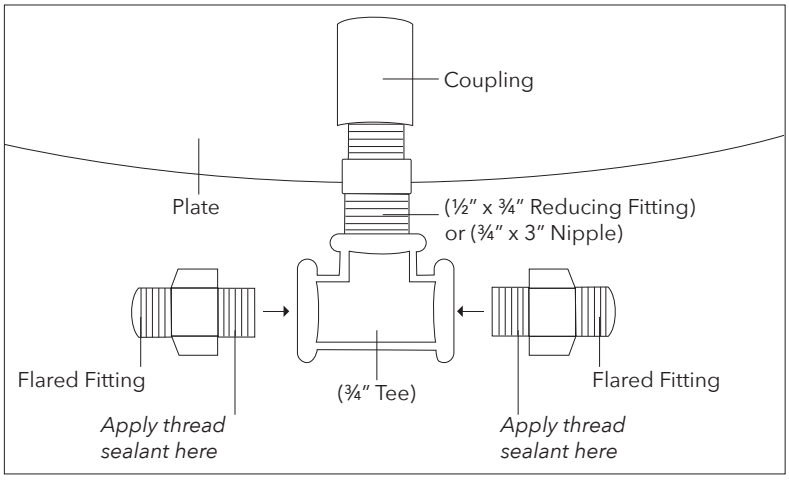

5. CONNECT FIT KIT TO KEY VALVE AND FLARED FITTINGS

(FK2) Connect ¾" x 3" Nipple to Key Valve.

Then connect the ¾" Tee to the connection just made.

Connect ¾" Flared Fittings to the ¾" Tee.

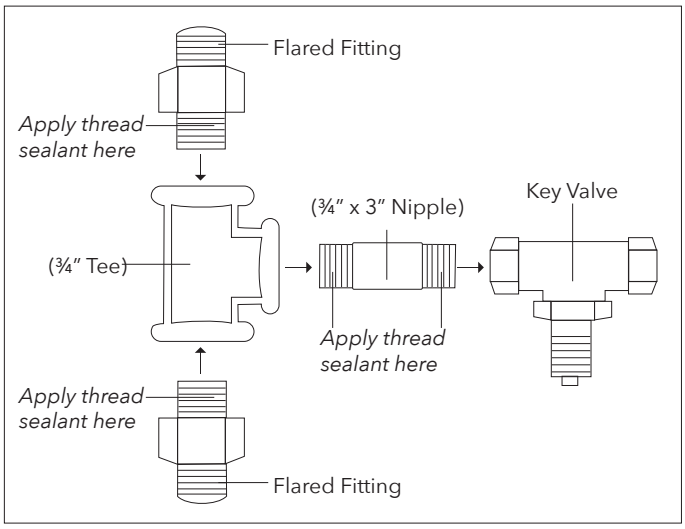

6. CONNECT FLEX LINES TO COUPLING AND KEY VALVE CONNECTION

(FK2) Connect ends of ¾" Whistle-Free Flex Lines to Flared Fittings connected to the aluminum plate and Coupling.

Then connect available ends of the Whistle-Free Flex Lines to the Key Valve Connection.

Connect Escutcheon Plate to Key Valve through vessel wall. Tighten.

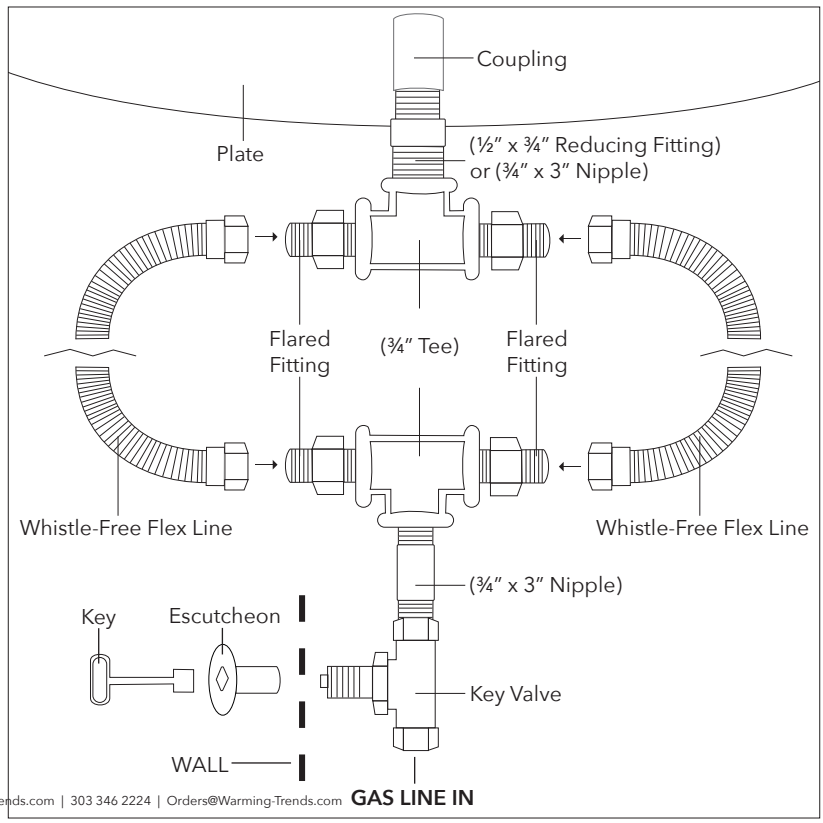

1. LOCATE FK1

Parts include Whistle-Free Flex Line, key valve, escutcheon plate, and keys.

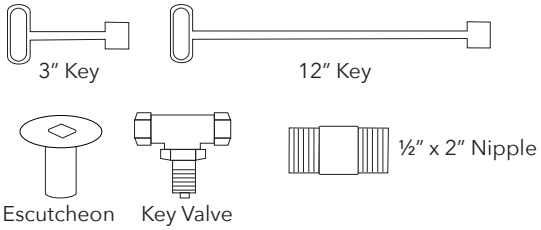

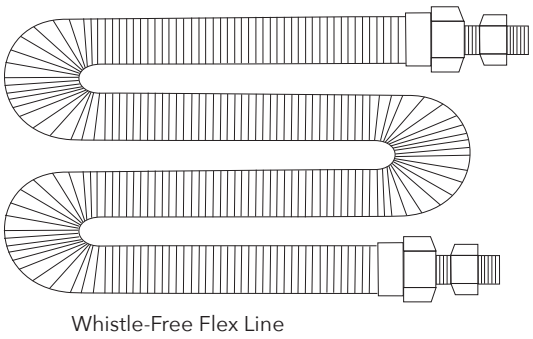

2. REMOVE FLARED FITTINGS FROM WHISTLE-FREE FLEX LINES

Removing flared fittings first makes attaching to ½" x 2" Nipple easier.

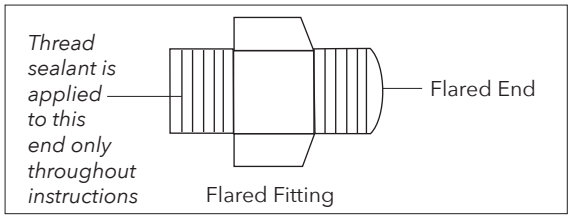

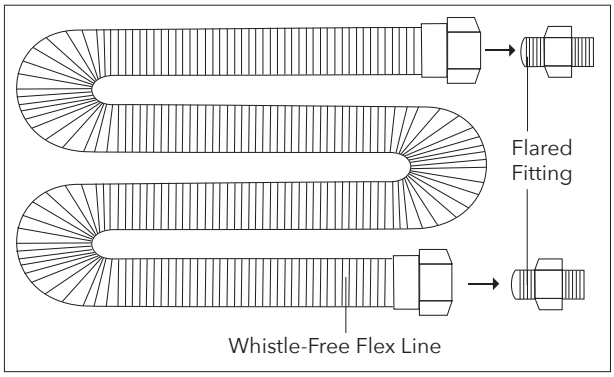

3. CONNECT TO COUPLING

(FK1) Connect one ½" Flared Fitting removed in Step 2 to ½" x 2" Nipple fitting provided by inserting ½" x 2" Nipple into interior threads of the Flared Fitting. Tighten.

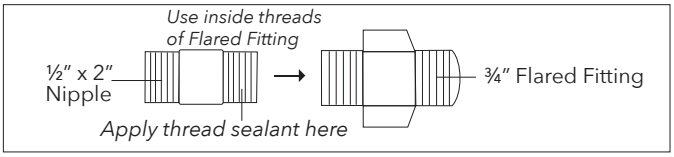

Then, connect the ½" x 2" Nipple to Gas Valve.

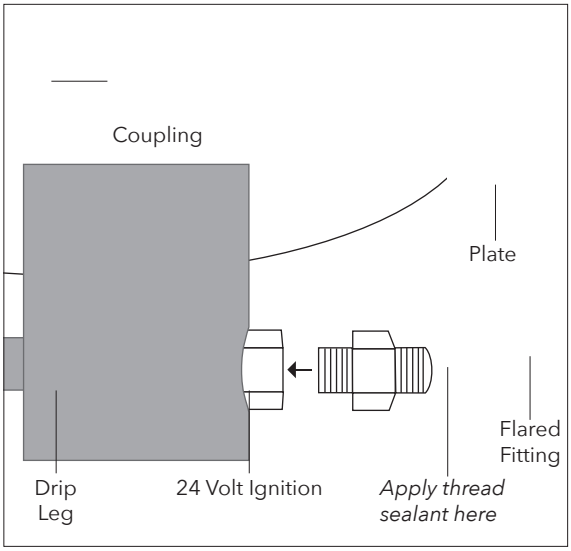

4. LOCATE 2ND FLARED FITTING AND CONNECT TO KEY VALVE

(FK1) Locate the other Flared Fitting removed in Step 2 and connect into the Key Valve, placing the non-flared end into the key valve. Tighten.

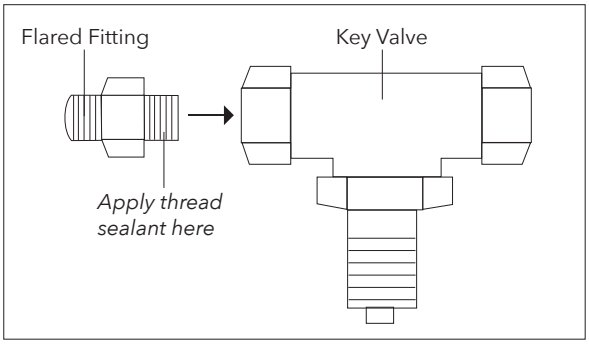

5. CONNECT FLEX LINE TO IGNITION AND KEY VALVE

(FK1) Connect Whistle-Free Flex Line to Flared Fitting connection at ignition and then to Key Valve connection in Step 5.
Connect Escutcheon Plate to Key Valve through vessel wall. Tighten.

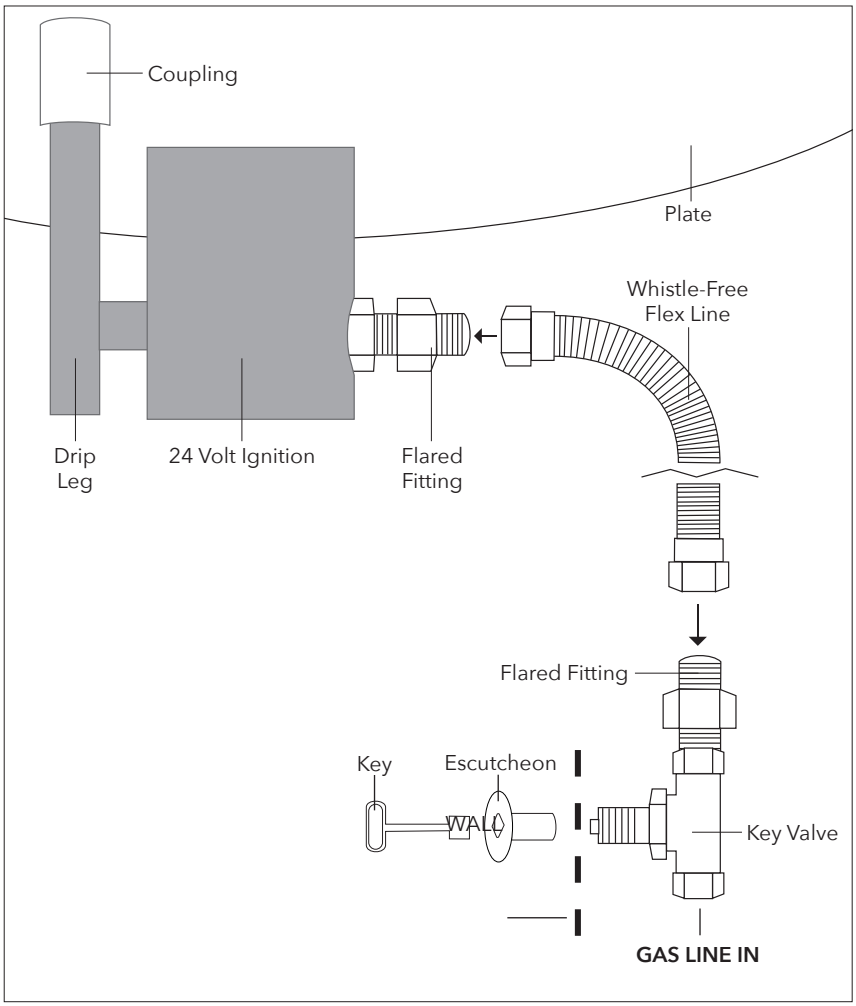

6. CONNECT ELECTRICITY

(FK1) Plug ignition into three prong, above grade, NEMA Rated, outdoor specific GFCI electrical outlet, or have electrician hardware ignition into transformer.

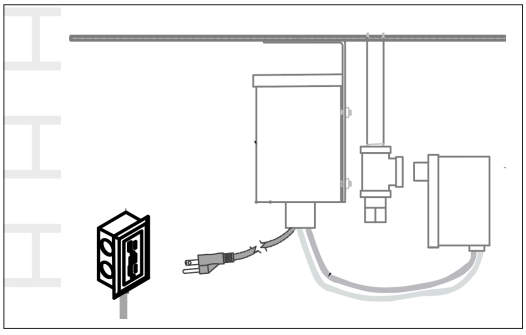

250K - 300K+ BTU SYSTEMS

1. LOCATE FK2

Parts include two Whistle-Free Flex Lines, key valve, escutcheon plate, and keys.

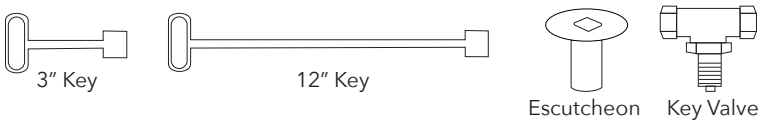

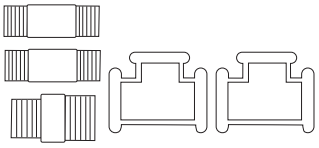

(2) ¾" x 3" Nipple
(2) ¾" Tees
(1) ¾" x ½" MM Reducer Fitting

YOUR INSTALLATION MAY NOT REQUIRE ALL PARTS.

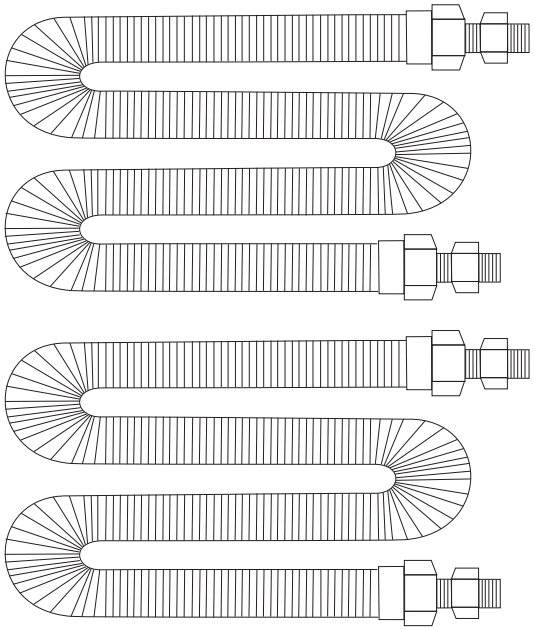

Whistle-Free Flex Lines

2. REMOVE FLARED FITTINGS FROM WHISTLE-FREE FLEX LINES

(FK2) Removing flared fittings first makes attaching to the ¾" Tees easier.

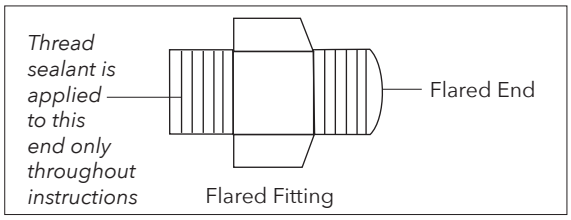

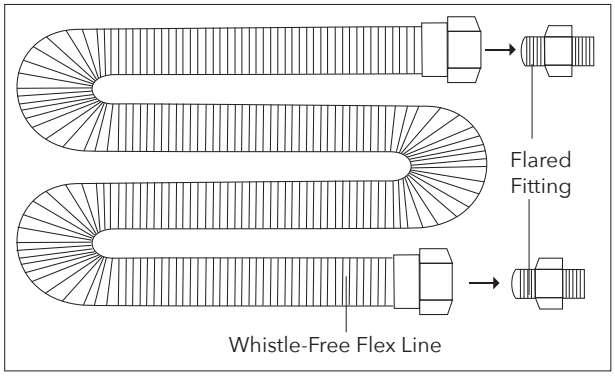

3. CONNECT TO COUPLING

(FK2) **Do not use 2nd ¾" x 3" Nipple with this install.** Connect ½" x ¾" Reducing Fitting to Gas Valve.

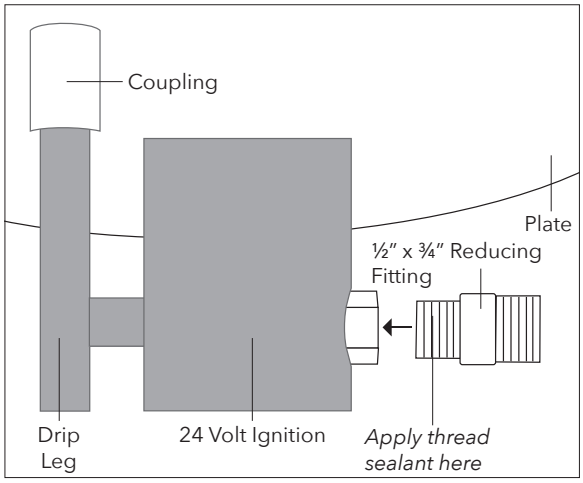

3A. CONNECT TO COUPLING

(FK2) **Do not use ½" x ¾" reducer fitting with this install.** Connect ¾" x 3" Nipple to Gas Valve.

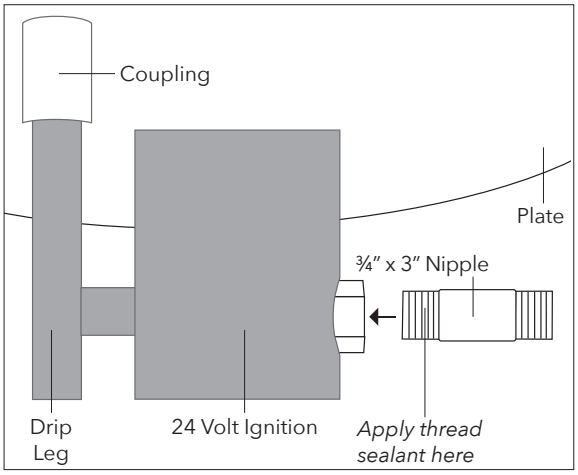

4. CONNECT FLARED FITTINGS TO ¾" TEE

(FK2) Connect ¾" Tee to ½" x ¾" Reducing Fitting or ¾" x 3" Nipple.
Then connect Flared Fittings to ¾" Tee.

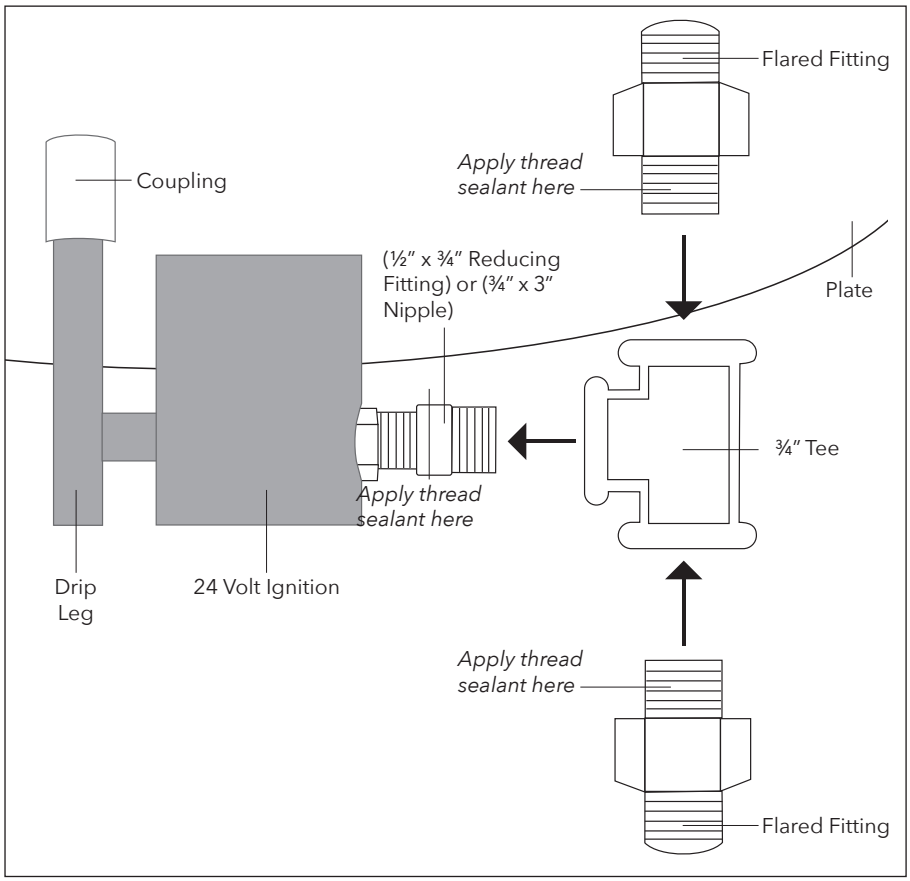

5. CONNECT FLEX LINES TO TEE

(FK2)

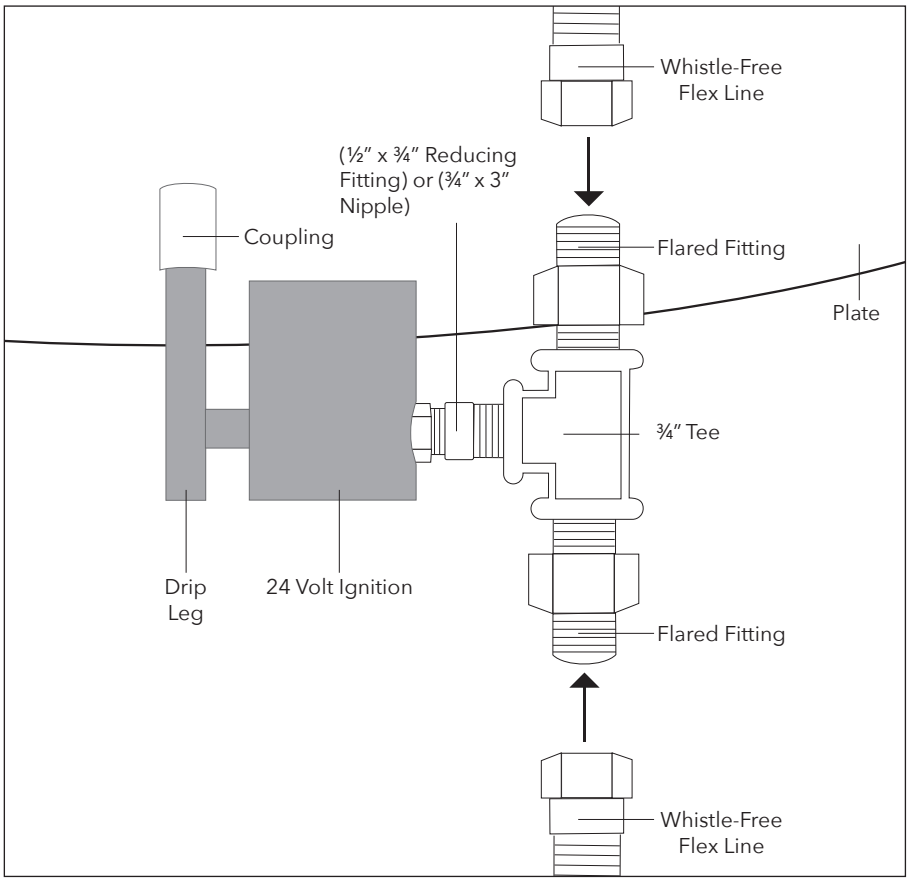

6. CONNECT FIT KIT TO KEY VALVE AND FLARED FITTINGS

(FK2) Connect ¾" x 3" Nipple to Key Valve.
Then connect the ¾" Tee to the connection just made.
Connect ¾" Flared Fittings to the ¾" Tee.

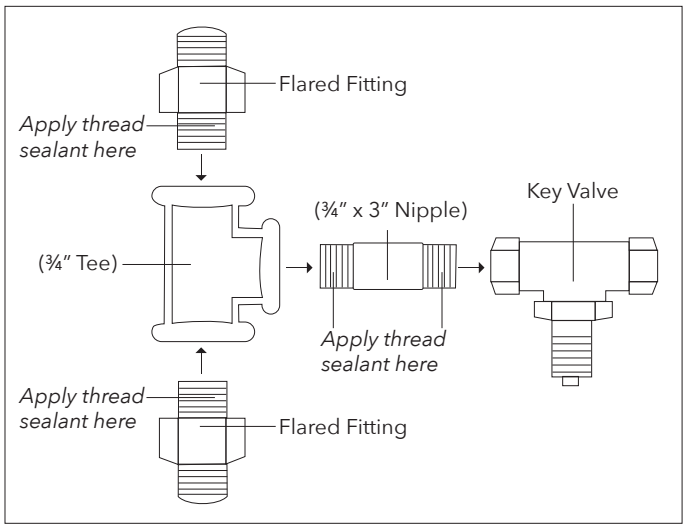

7. CONNECT FLEX LINES TO COUPLING AND KEY VALVE CONNECTION

(FK2) Connect ends of ¾" Whistle-Free Flex Lines to Flared Fittings connected to the 24 Volt Ignition. Then connect available ends of the Whistle-Free Flex Lines to the Key Valve Connection. Connect Escutcheon Plate to Key Valve through vessel wall. Tighten.

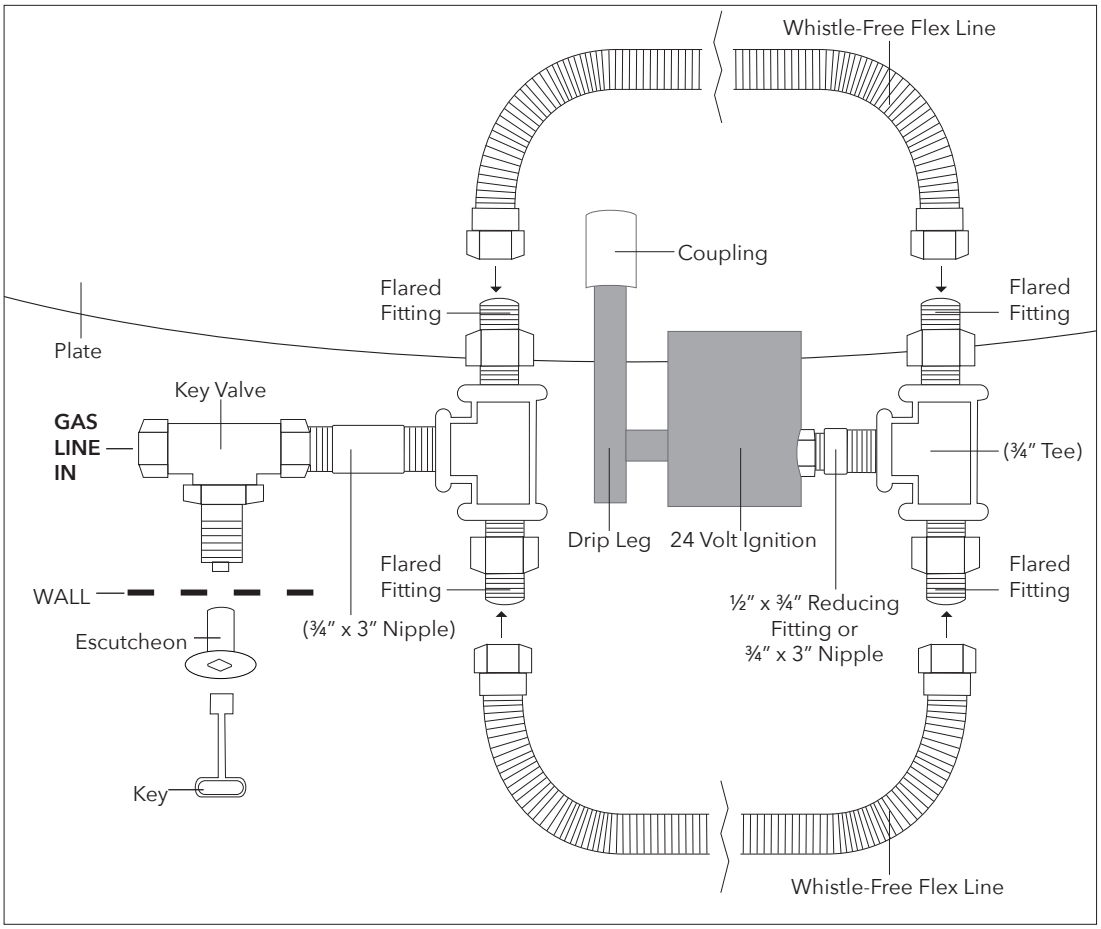

8. CONNECT ELECTRICITY

(FK2) Plug ignition into three prong, above grade, NEMA Rated, outdoor specific GFCI electrical outlet or have electrician hardware ignition into transformer.

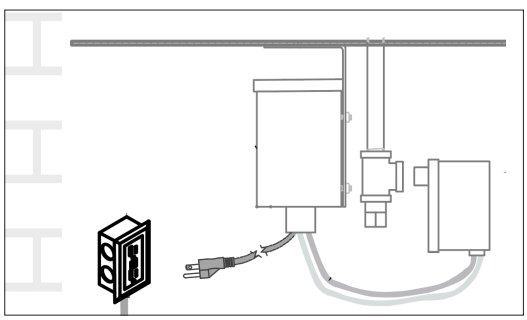

PUSH BUTTON IGNITION SYSTEM CONNECTION DIAGRAMS - UP TO 300K BTU SYSTEMS

1. To place the Spark Igniter in the proper position, installer will need to drill a hole in the plate.
Measure where to drill hole by holding tip of Spark Igniter no further than .125" away from inside edge of jet. Drill hole where base of spark igniter sits. Thread wires through drilled hole and pull until Spark Igniter bracket is in place on plate. Screw Spark Igniter to plate.

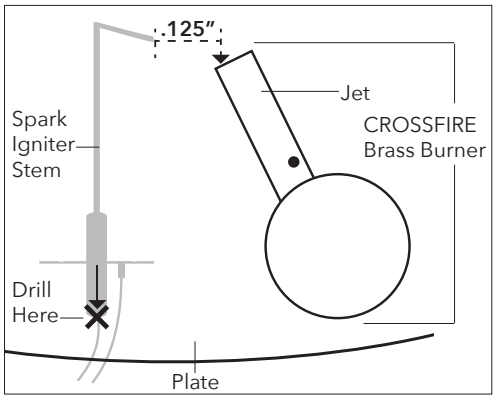

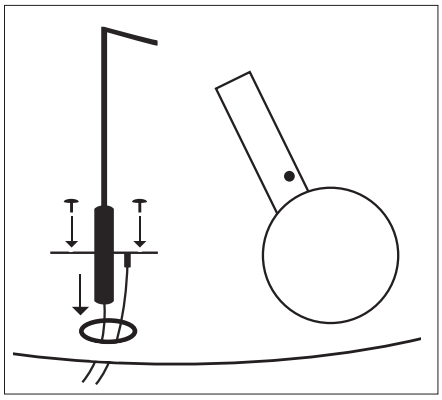

*If the distance to the jet is greater than .125", you can adjust the position by **gently** bending the spark ignitor by the stem. Bending too far can result in breakage. Do not flex at the existing bend, this can result in breakage. If the spark ignitor is too far away or too close to the jet, you will not get a strong enough spark to light the burner.*

2. Install Push Button Module into Mounting Bracket
Unscrew Button Cover.
Remove plastic Nut.
Insert Push Button Stem through mounting bracket hole.
Put on plastic Nut and turn until Push Button Control has been secured to mounting bracket.
Insert AA Battery into Button Stem.
Screw on Button Cover.

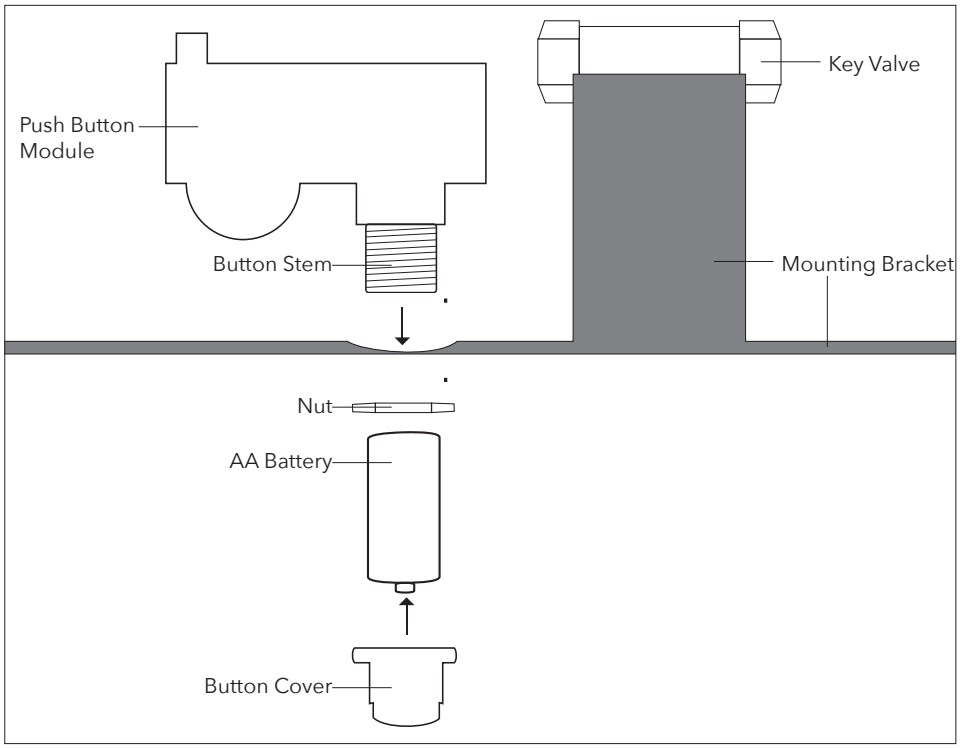

3. Connect Spark Igniter Wires
Crimp Spark Igniter Wires, then slide crimped wires on to connections using needle nose pliers. Be careful not to break connectors. Wires can go in either connection.

4. Test without Gas
Test Spark Igniter and Push Button Module WITHOUT gas, making sure spark arcs from electricity to jet.

5. Test with Gas
Burner should light within 5 seconds or a few clicks.

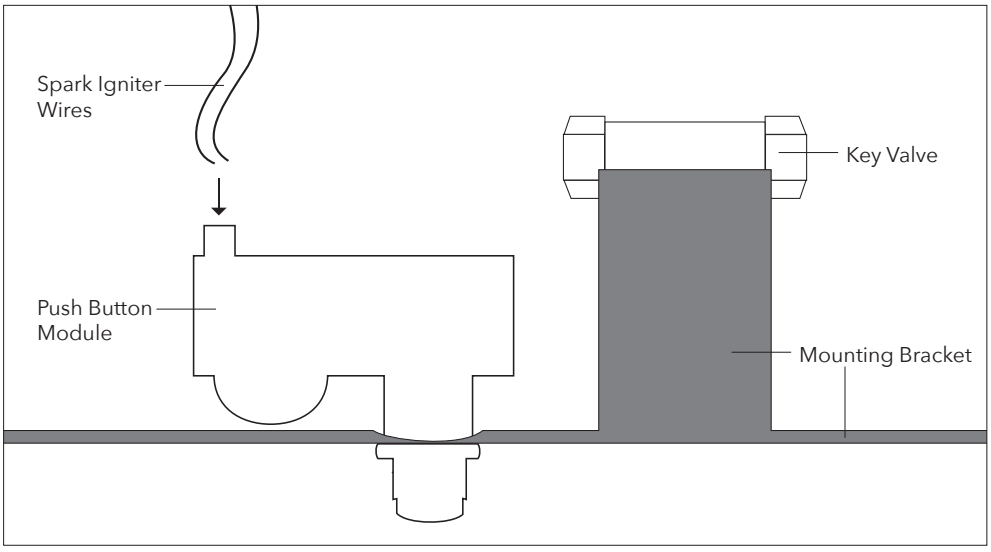

MERCURY IGNITION: INSTALLATION INSTRUCTIONS

If the Pilot Assembly for the Mercury Ignition is not installed on the Plate or Pan, start here for complete installation instructions. If the Pilot Assembly has been installed on the plate or pan, skip to step 3 below for installation instructions.

INSTALLATION OF THE MERCURY IGNITION PILOT ASSEMBLY TO THE PLATE USING PRE-CUT KNOCKOUTS

The Warming Trends plate/pan that was included with your Order should have pre-cut pilot assembly knockouts for various burners. The burner type and size are etched into the plate/pan next to the knockout for that burner's pilot assembly location.

1. LOCATE AND REMOVE THE APPROPRIATE KNOCKOUT

1.1 **Confirm the type and size of your burner on the Packing Slip for your Order.**

1.2 Locate the Pilot Assembly knockout on the plate/pan that matches your burner type and size. {See Photo 1}.

1.3 Remove the matching knockout by placing a screwdriver or other small tool in the opening at the edge of the knockout. Push one side of the knockout down to break the connector and remove the circular piece of aluminum with pliers. Do not remove any other knockouts. {See Photo 2}.

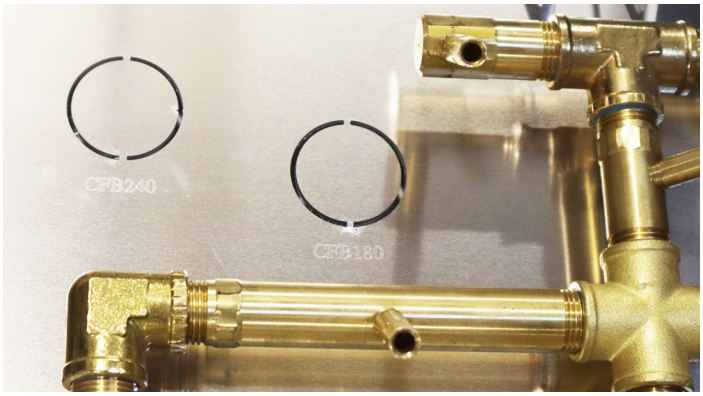

Photo 1: Pilot Assembly Knockouts

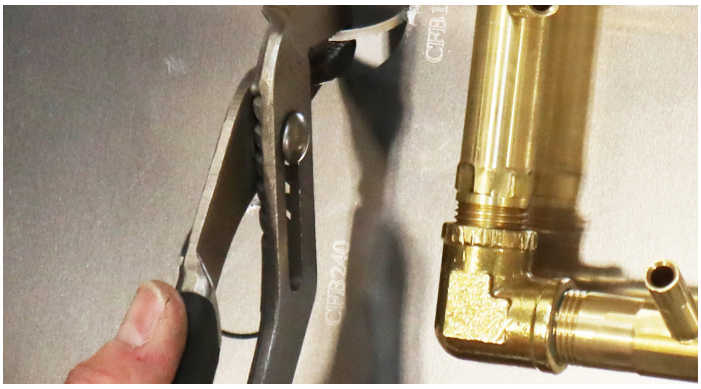

Photo 2: Breaking the Knockouts

2. INSTALLING THE PILOT ASSEMBLY ON THE PLATE/PAN

2.1 Locate the Pilot Assembly. This includes the Pilot Hood, the Electrode and Thermocouple. {See Photo 3a and 3b}.

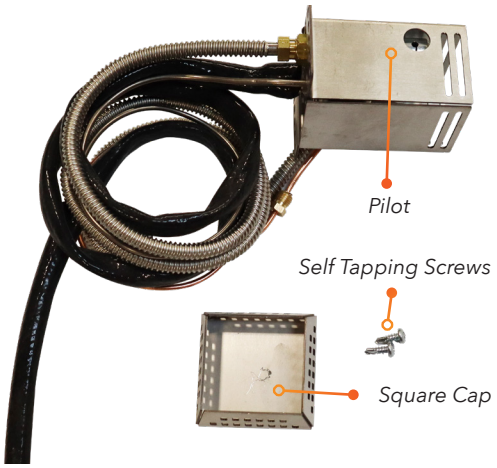

Photo 3a: Full Pilot Assembly

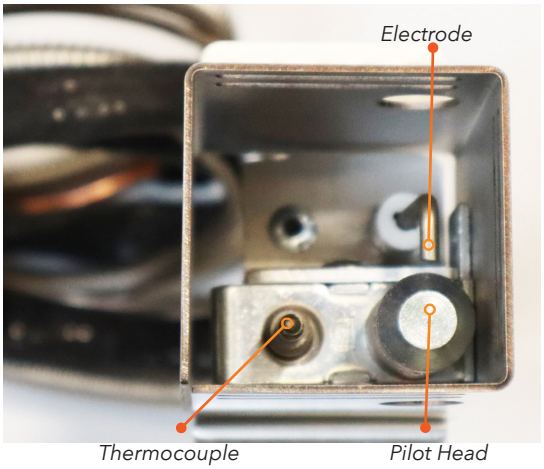

Photo 3b: Top-Down View of Pilot Assembly

2.2 Remove the square cap from the top of the Pilot Assembly and set it aside until the plate/pan is installed onto your fire feature.

2.3 Carefully unroll the wires coming from the bottom of the Pilot. *Over handling of the thermocouple wire can cause breakage or malfunction.* Feed the wires through the knockout opening created in step 1.3.

2.4 Rotate the Pilot Assembly in the knockout opening until the circular opening on the Pilot Hood and Thermocouple are adjacent to the nearest jet with the Thermocouple nearest to the jet. Position the Pilot Assembly to cover the entire knockout opening. {See Photo 4a and 4b}.

Photo 4a: Thermocouple Positioning

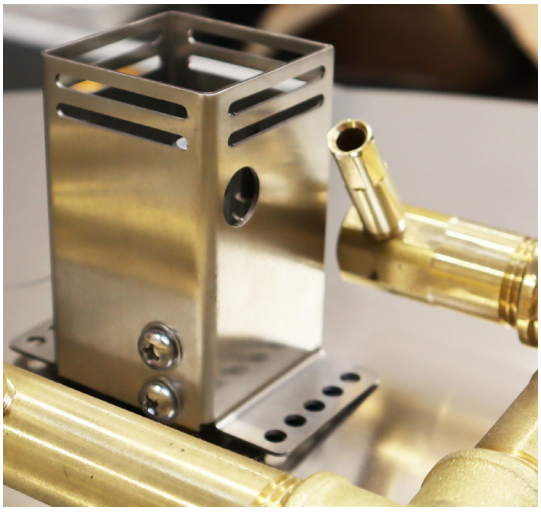

Photo 4b: Pilot Hood Circular Opening Positioning

2.5 Once the Pilot is properly aligned, use the self-tapping screws to secure the Pilot to the plate/pan. {See Photo 5}

Photo 5: Securing the Pilot to the Plate/Pan

3. INSTALL THE VALVE ASSEMBLY IN THE VESSEL

3.1 Install the Ignition Control/Valve Assembly in the exterior wall of the vessel and secure in place. {See Clearance Diagram on page 11 of this Instruction Manual.}

---

4. CONNECTING THE FLEX LINE TO THE VALVE ASSEMBLY

Please Note: Warming Trends sells two Flex Line Kits for the Mercury Ignition, depending on the BTU supply of the burner. The FKM1 has one (1) flex line and fits burners up to 249 BTUs {See Photo 6}. The FKM2 has two (2) flex lines and fits burners 250 BTUs or more {See photo 7}. Follow the assembly instructions below specific to your Flex Line Kit.

Photo 6: FKM1

Photo 7: FKM2

FKM1 INSTRUCTIONS:

4.1 Identify the "outlet" on the Valve Assembly. The outlet should have a pre-installed ½" x 2" nipple attached. {See Photo 8a}. Apply joint compound, thread sealant, or plumbing tape to the threads of the exposed end of the ½" x 2" nipple. {See Photo 8b}.

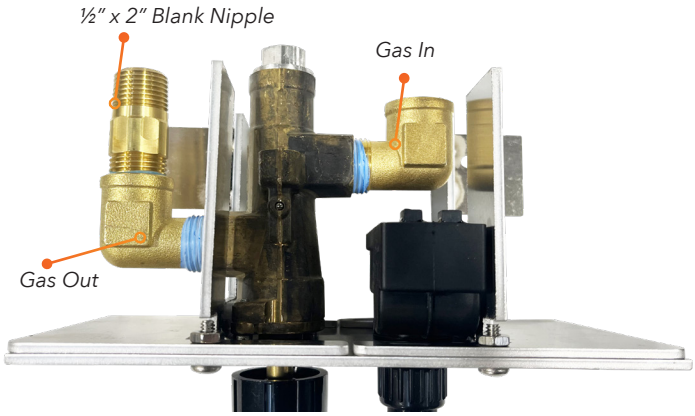

Photo 8a: Valve Assembly

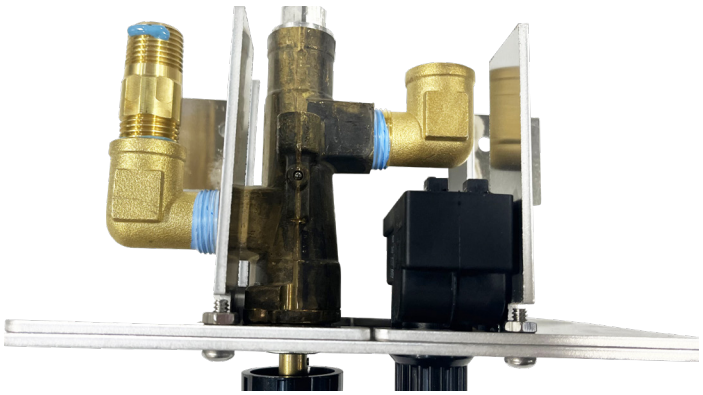

Photo 8b: Applying Joint Compound

4.2 The Flex Line is provided with a male flare hose adapter loosely attached. Remove the flare hose adapter from the end of the Flex Line.

4.3 Thread the female, non-flared end, of the hose adapter on to the exposed end of the ½" x 2" nipple of the valve assembly "outlet". {See Photo 9}. Tighten with a wrench to avoid leaks.

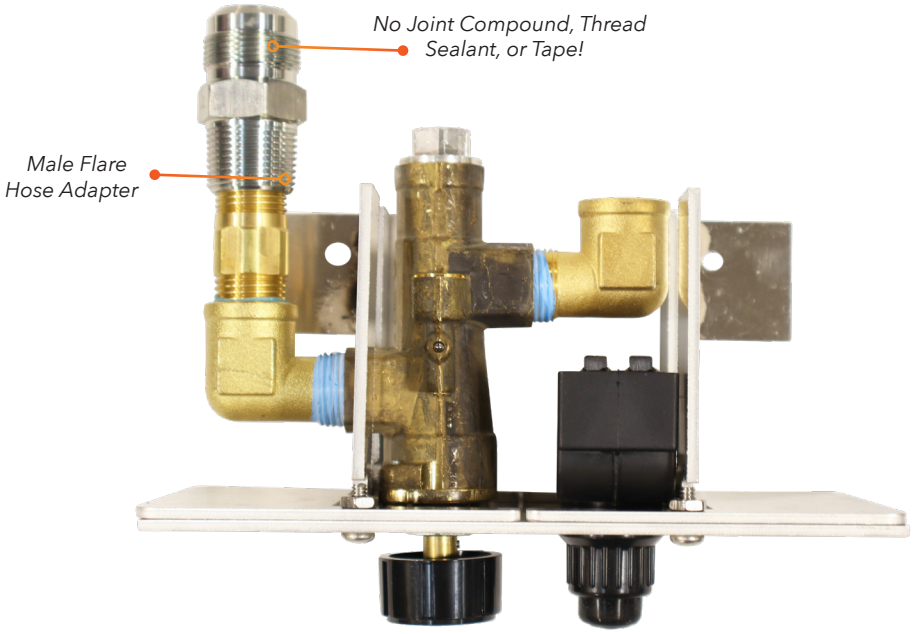

Photo 9: Attaching the Hose Adapter

4.4 DO NOT USE ANY JOINT COMPOUND, THREAD SEALANT, OR PLUMBING TAPE ON THE FLARED END OF FLARED FITTINGS – DOING SO CAN CAUSE LEAKS! Attach the female flared end of the Flex Line to the male flared end of the hose adapters on the Valve Assembly {See Photo 10}.

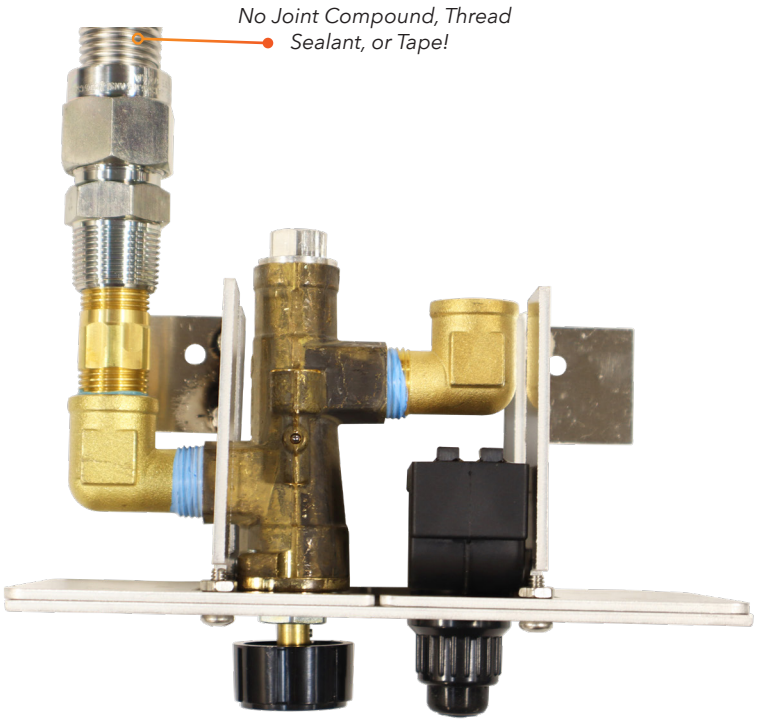

Photo 10: Connecting the Flex Line

FKM2 INSTRUCTIONS:

4.5 Identify the "outlet" on the Valve Assembly. The outlet should have a pre-installed ½" x 2" nipple attached. {See Photo 8a} Apply joint compound, thread sealant, or plumbing tape to the threads of the exposed end of the ½" x 2" nipple. {See Photo 8b}.

4.6 Apply joint compound, thread sealant, or plumbing tape to the threads of the male end of the 1/2" x 2" nipple on the Valve Assembly "outlet" and connect it to the ¾" x ½" reducing bushing. Tighten with a wrench to avoid leaks. {See Photo 11a and 11b to see which threads need sealant and the assembly order}

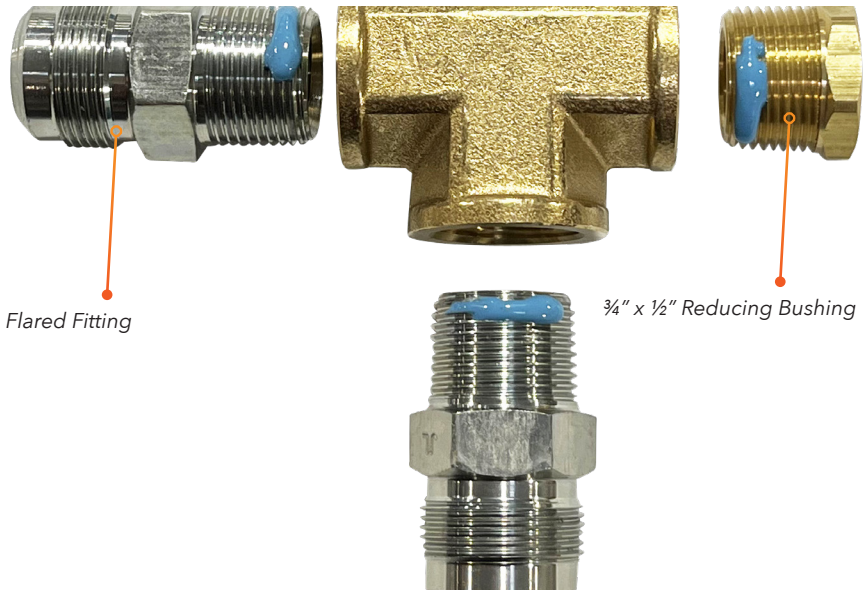

Photo 11a: Assembly Order

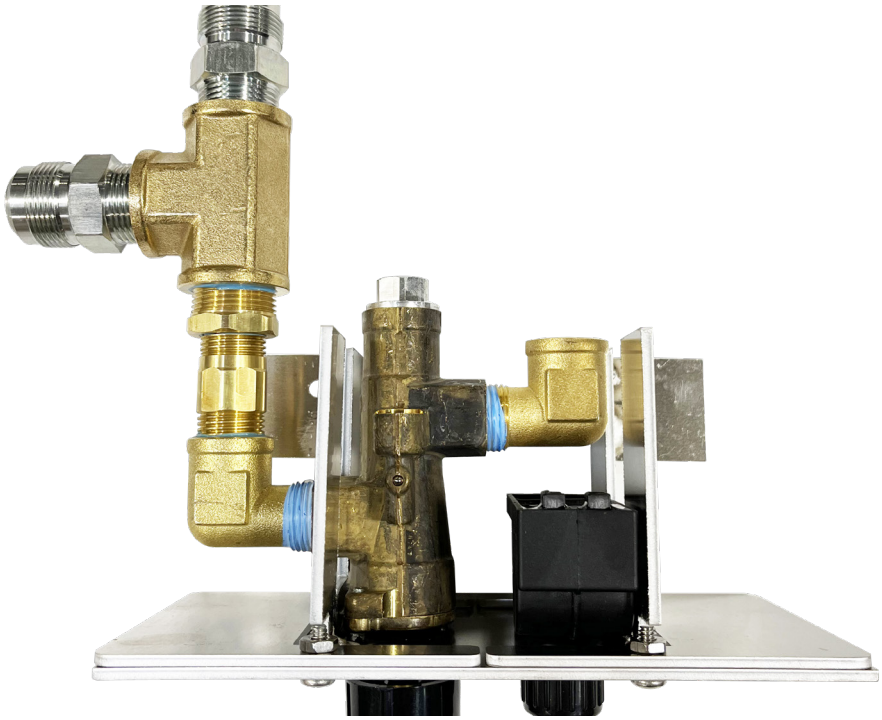

Photo 11b: Final Assembly Configuration

4.7 Apply joint compound, thread sealant, or plumbing tape to the ¾'' male threads on the ¾'' x ½'' reducing bushing and connect it to the side of the ¾" Tee. Tighten with a wrench to avoid leaks. {See Photo 11a and 11b to see which threads need sealant and the assembly order}

4.8 Apply joint compound, thread sealant, or plumbing tape to the threads of the male end of two of the flared fittings. Connect the male ends to the bottom and side of the ¾" Tee. Tighten with a wrench to avoid leaks. {See Photo 11a and 11b to see which threads need sealant and the assembly order}

4.9 WITHOUT ANY THREAD SEALANT, connect one end of each of the two Flex Lines to the flared end of each of the flared fittings extending from the ¾" Tee. Tighten with a wrench to avoid leaks. {See Photo 12}.

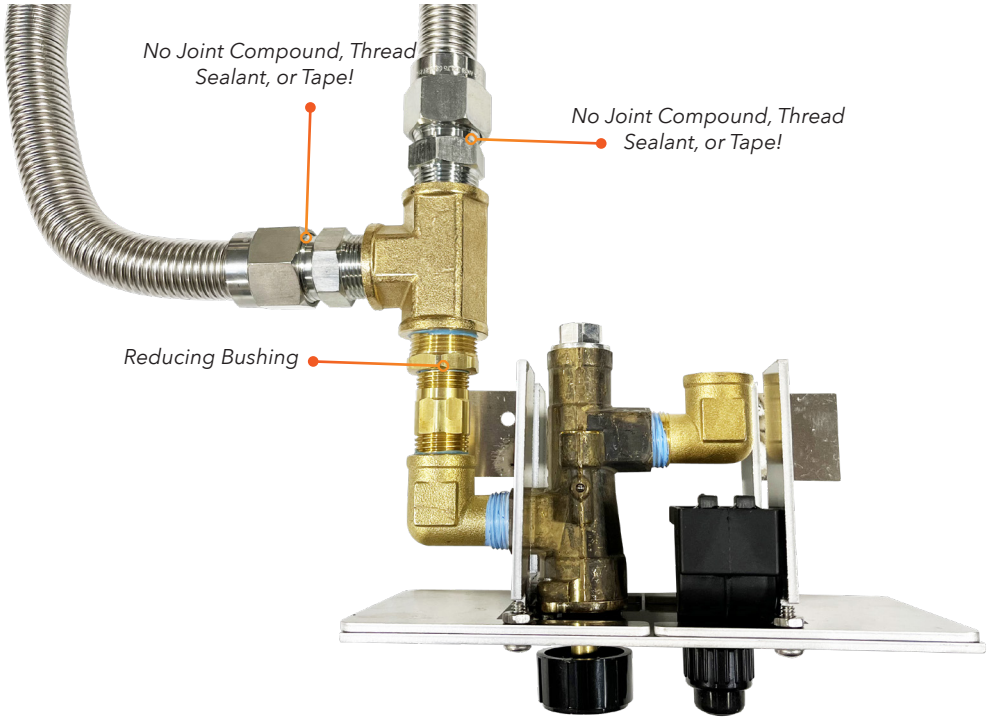

Photo 12: Final Assembly with Flex Lines Connected

5. CONNECT THE 4 PILOT CONNECTIONS TO THE VALVE ASSEMBLY

5.1 The Thermocouple connects to the female threaded bushing of the Valve Assembly. Thread the Thermocouple in place, tighten with a 9mm wrench, and confirm it is firmly seated. {See Photo 13}. Do not use pliers as this can put excess pressure on the connection, which could damage the thermocouple.

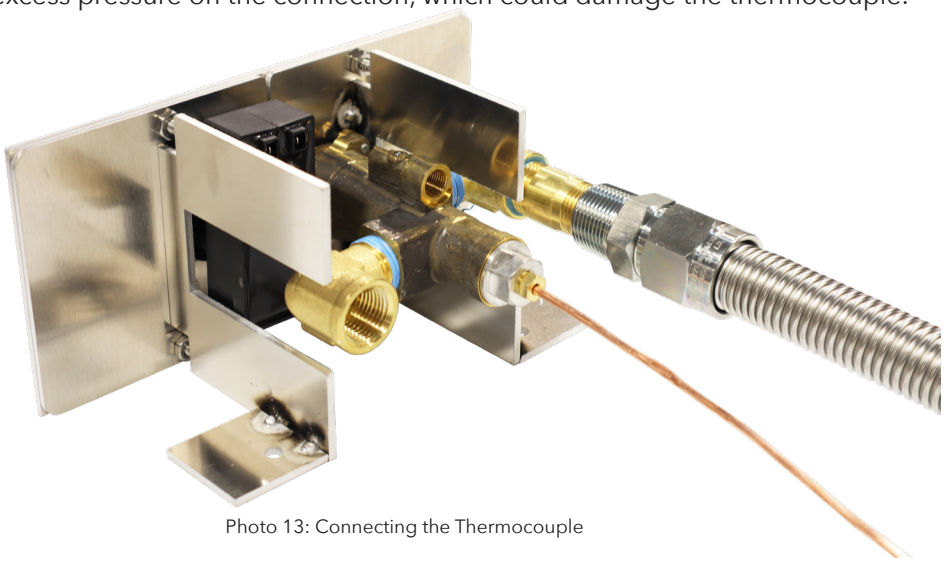

Photo 13: Connecting the Thermocouple

5.2 The pilot tube connects directly above the thermocouple. Thread the pilot tube into the brass fitting integrated into the valve body that is directly above the thermocouple connection. {See Photo 14}. Tighten with a 7/16 in wrench and confirm that the pilot tube is firmly seated to avoid leaks.

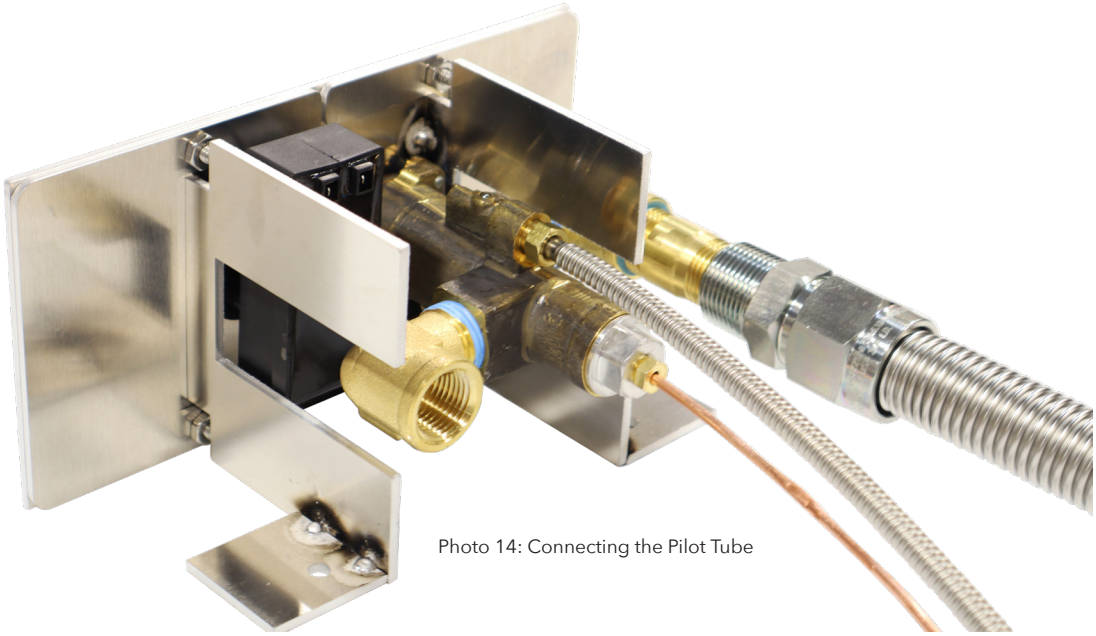

Photo 14: Connecting the Pilot Tube

5.3 Connect the loose ends of the spark generator to the push button module by the two wires within the thermal sleeve – one orange and one green. (The other ends of the wires are pre-installed to the Pilot Assembly). Push each wire firmly into one of the two (2) receptacles on the push button module, which is behind the valve inlet. {See Photo 15}. (Either wire will work in either receptacle). Confirm they are firmly secured.

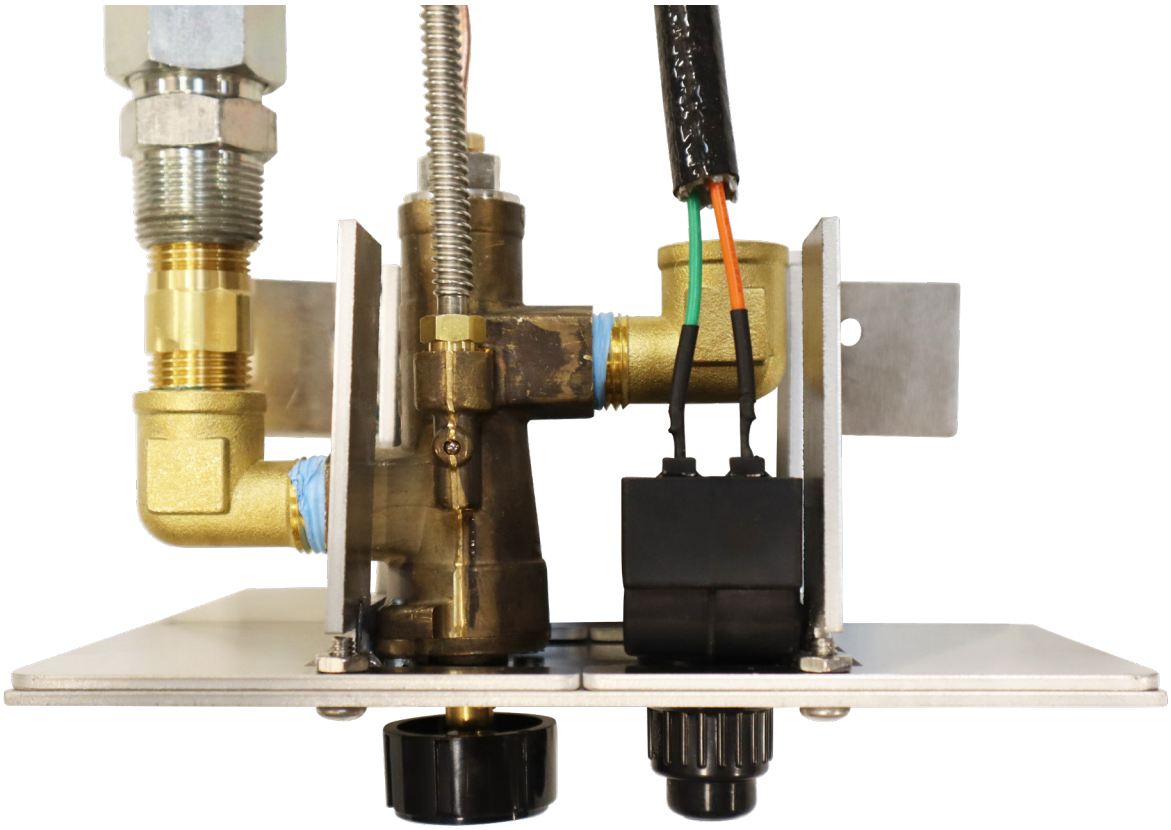

Photo 15: Connecting the Spark Generator to the Push Button Module

6. CONNECTING THE FLEX LINE TO THE PLATE

FKM1 INSTRUCTIONS:

Photo 16: Attaching the ½" x 2" Nipple to the Plate Coupling

6.1 Identify the coupling under the plate. Apply joint compound, thread sealant, or plumbing tape to the threads of the exposed end of the provided ½" x 2" nipple and tighten to the female end of the coupling with a wrench to avoid leaks. {See Photo 16}.

6.2 A male flare hose adapter is loosely attached flex line. Remove the male flare hose adapter from the end of the flex line.

Photo 17: Attaching the Male Flare Hose Adapter

6.3 Apply joint compound, thread sealant, or plumbing tape to the threads of the ½" x 2" nipple. Thread the non-flared end of the hose adapter on to the ½" x 2" nipple on the valve assembly "outlet". {See Photo 17}. Tighten with a wrench to avoid leaks.

Photo 18: Connecting the Flex Line

6.4 WITHOUT ANY THREAD SEALANT take the other end of the flex line attached to the valve assembly from Step 4 and attach the female flared end to the male flared end that is attached to the plate from Step 6.3. {See Photo 18}

FKM2 INSTRUCTIONS:

6.5 Identify the coupling under the plate. Apply joint compound, thread sealant, or plumbing tape to the threads of the ½" end of the ½" x ¾" reducing fitting and tighten to the female end of the coupling with a wrench to avoid leaks. {See Photo 19a and 19b to see which threads need sealant and assembly order}.

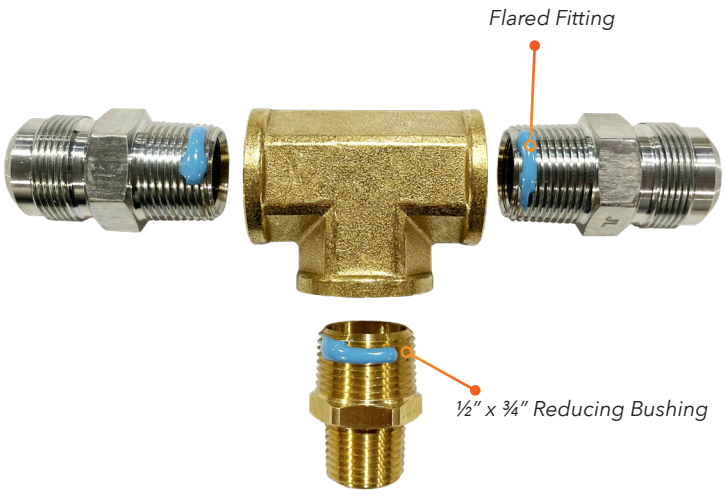

Photo 19a: Assembly Order

Photo 19b: Final Assembly Configuration

6.6 Apply joint compound, thread sealant, or plumbing tape to the threads to the ¾" end of the ½" x ¾" reducing fitting and connect to the bottom of the ¾" Tee. Tighten with a wrench to avoid leaks. {See Photo 19a and 19b to see which threads need sealant, and the assembly order}

6.7 A flared fitting is loosely attached to each Flex Line. Remove the flared fitting from the ends of each Flex Line.

6.8 Apply joint compound, thread sealant, or plumbing tape to the threads of the male end of two of the flared fittings. Connect the male ends to the two sides of the ¾" Tee. Tighten with a wrench to avoid leaks. {See Photo 19a and 19b to see which threads need sealant, and the assembly order}.

6.9 WITHOUT ANY THREAD SEALANT, take the female flared ends of the flex lines attached to the valve assembly from Step 4 and attach to the male flared end of each of the flared fittings extending from the ¾" Tee. Tighten with a wrench to avoid leaks. {See Photo 20}.

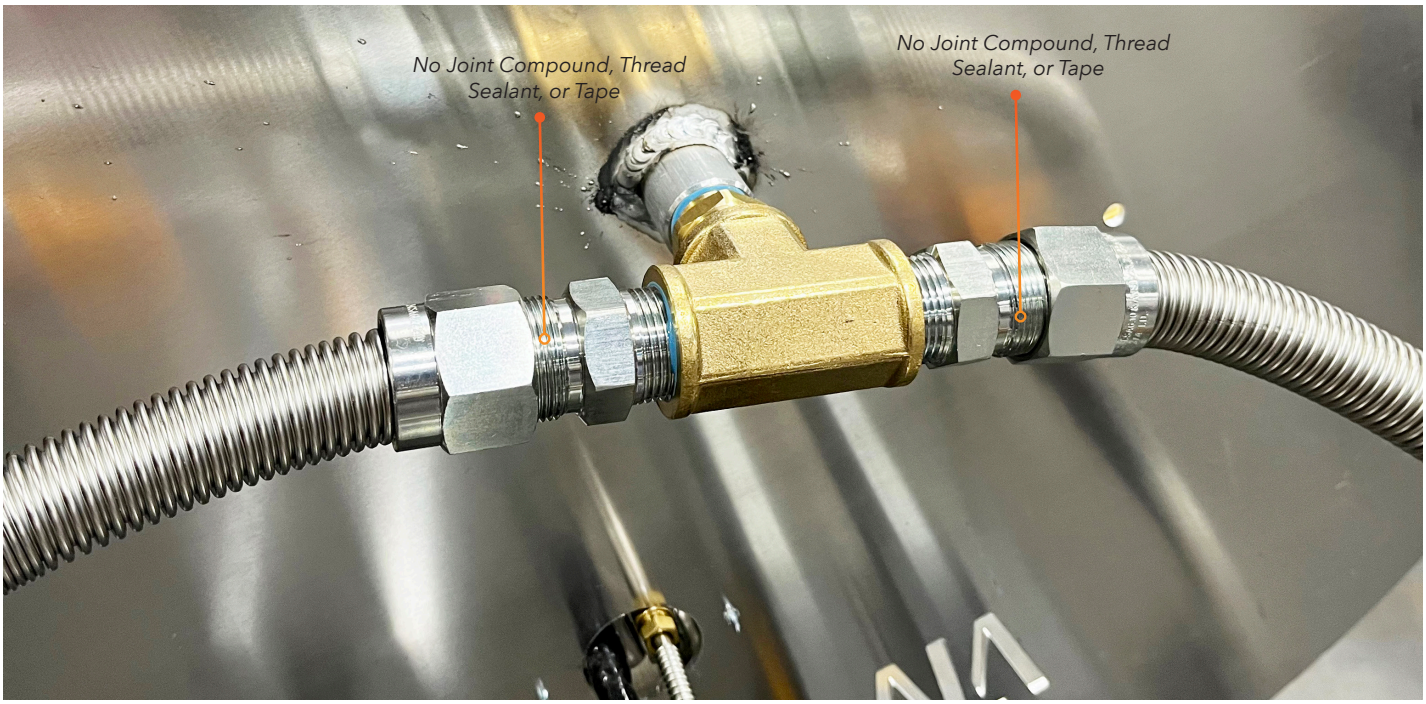

Photo 20: Connecting the Flex Lines

7. PLACE THE PLATE/PAN WITH THE ATTACHED PILOT ASSEMBLY INTO THE FIRE FEATURE.

8. PUT THE TOP OF PILOT HOOD BACK IN PLACE.

9. REFER TO THE GENERAL INSTALLATION INSTRUCTIONS FOR ALL UNITS ON PAGES 12 - 13 OF THIS INSTRUCTION MANUAL.

WARNING LABEL

The following label has been provided with the appliance. Affix the label in a conspicuous location adjacent to the appliance.

WARNING: Improper installation, adjustment alteration, service, or maintenance can cause property damage, personal injury, or loss of life. Refer to the owner's user guide provided with this appliance. Installation and service must be performed by a qualified installer, service agency, or the gas supplier.

WARNING: Do not store or use gasoline or other flammable vapors and liquids in the vicinity of this or any other appliances.

An LP-cylinder not connected for use shall not be stored in the vicinity of this or any other

AVERTISSEMENT: Une installation, un ajustement, une modification, une réparation ou un entretien inapproprié peuvent être la cause de blessures ou de dommages. Veuillez lire attentivement les instructions d'installation, d'utilisation et d'entretien avant d'installer ou de réparer ce matériel.

AVERTISSEMENT: Ne pas entreposer ni utiliser de l'essence ni d'autres vapeurs ou liquides inflammables dans le voisinage de l'appareil, ni de tout autre appareil.

MEDIA INSTALLATION

Only use approved decorative media (glass, lava rock, ceramic log sets, steel log sets, etc.) that have been manufactured for specific use in outdoor fire features.

Media must be ½" or larger in size to prevent media from falling into gas orifices and blocking flow of gas out of jets. Use approved media only. **To avoid media dust or debris from getting into the system, do not dump the media over the burner.** Place the media onto the plate or pan.

The appliance is designed to use approved media that is correctly installed over the burner to achieve proper combustion. Use of any media outside of the approved media may void warranty and affect proper operations.

Burner may be covered by approved media up to ½" above the jets. PLEASE NOTE - Covering jets by more than ½" of media may create back pressure and gas leakage resulting in pooling of gas under the fire feature which can result in explosion which could cause property damage, personal injury, or death.

Media should be piled no more than halfway up the pilot of assembly so that pilot gas orifice opening and the pilot cooling holes are above the media allowing for pilot flame to easily reach gas jet orifice. Incorrect media installation that blocks pilot cooling holes will cause the pilot flame to stifle, blocking of thermal sensor and/or a delay in burner ignition. (See pictures below for examples of proper installation heights.)

For Ceramic Log Sets: Place logs on top of lava rock or media base according to preference and desired flame pattern. Do not block, cover, or obstruct the pilot assembly. Blocking, covering, or placing ceramic logs too close to the pilot assembly may cause excessive heat on pilot causing system to fail. This is not covered under warranty.

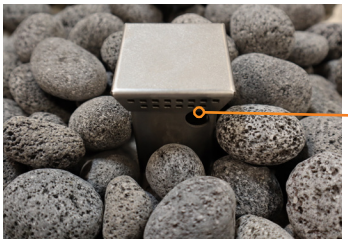

Examples of proper media height on pilot assembly.

Pilot Cooling Holes
1 1/2"

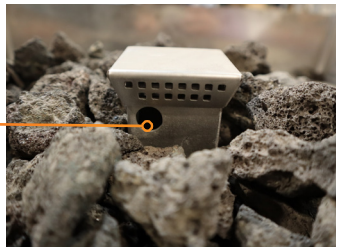

OPERATING INSTRUCTIONS

Keep the area clear and free from combustible materials, gasoline, and other flammable vapors and liquids.

Solid fuels shall not be burned in the fire feature. Leaves, sticks, wood, paper, clothing, food material, etc. should be kept away from the fire feature. Make sure that there is no vegetation or other objects over the top or sides of the fire feature that could interfere with safe operation. If there are any questions as to clearances, refer to CLEARANCES DIAGRAM starting on page 10 in your Installation User Guide for specific clearance allowances.

Wind and gusty conditions may cause the flame to behave in an unpredictable manner. If conditions exist, turn off the fire feature.

All media (lava rock, volcanic stone, fire glass, etc.) has the potential of thermal spalling. This process may occur when media is wet and moisture gets trapped inside of the material due to rapid temperature differences. When this happens, the media has the potential to crack or pop outside of the fireplace. Extra caution should be taken when lighting in high humidity or moisture. After igniting, allow 30 minutes to dry out the media and monitor from a distance until all popping has ceased before fully enjoying the fire.

LIGHTING INSTRUCTIONS: MATCH LIT IGNITION

TURNING ON YOUR MATCH LIT SYSTEM
STOP! Read all the safety information.

1. Any cover must be removed prior to operation of burner or appliance and must remain off during operation. **Danger: Fire or Explosion Hazard. If you smell gas, shut off gas to the appliance, extinguish any open flame. If odor continues, leave the area immediately. After leaving the area, call your gas supplier or fire department. Failure to follow these instructions could result in fire or explosion, which could cause property damage, personal injury or death.**
2. Confirm that your main Natural Gas or Liquid Propane supply to the appliance is open. **Do not open your key valve or gas control valve at this time.**
3. Before lighting, visually inspect fire feature and remove any accumulated leaves or other combustible debris.
4. Locate key valve or gas control valve controlling gas supply to your appliance.
5. Locate the closest jet tip on the exterior of the burner that can be easily accessed while operating key valve or gas control valve without reaching across other jets or the burner.
6. Place a lit lighter or match flame on or slightly above the tip of the jet located in Step 6 while not reaching over it. A long reach lighter or match is recommended.
7. While holding the flame on or slightly above the jet tip as described in Step 7 above, slowly turn the key valve or gas control knob to the left to allow a minimal flow of gas to the burner and light the selected jet. While attempting to light jet, do not substantially increase gas supply. Excessive flow of gas before jet is lit can cause pooling of gas and result in sudden flare up. **Failure to follow these instructions could result in fire or explosion, which could cause property damage, personal injury or death.**
8. Once the selected jet (or other jets) is lit, continue to keep any body parts from above the pit or burner and slowly turn the key valve or gas control knob further to the left to increase the flow of gas to the burner. The other jets of the burner should ignite.
9. You may follow the same procedure described above to light additional jets only if able to do so without reaching across the burner or other jets which may ignite.
10. If the flame will not stay lit after several attempts, turn the key valve to the off position and call your local technician or gas supplier for service prior to re-attempting to operate your appliance.
11. Once lit, use the key valve to adjust the flame to the desired height.

TURNING OFF YOUR MATCH LIT SYSTEM

1. Use key to turn valve to OFF position by turning key to the right.
2. Verify flame is OUT.
3. If using LP bottle/tank – turn bottle/tank to CLOSED position.
4. Allow to cool completely, then cover the fire feature with waterproof/weatherproof cover.

LIGHTING INSTRUCTIONS: MERCURY IGNITION

TURNING ON FIRE FEATURE

1. Confirm that your gas line is open.
2. Press **Control** knob and turn to the **Pilot** position.
3. Fully depress the **Control** knob. Simultaneously, press the **Ignition** button until a flame appears.
4. Once pilot is lit, release the **Ignition** button. Continue to depress **Control** knob for 45 seconds. Pilot should remain lit.
5. Once the pilot is lit, press **Control** knob in and turn counterclockwise to achieve desired flame height.
6. If burner does not light, turn **Control** knob to OFF position. Wait 3-5 minutes before repeating lighting instructions.

TURNING OFF FIRE FEATURE

1. Press **Control** knob in and turn to OFF position and verify flame is out.
2. If using a LP tank, be sure to turn tank to CLOSED position.

LIGHTING INSTRUCTIONS: ELECTRONIC IGNITION SYSTEMS

TURNING ON YOUR ELECTRONIC IGNITION SYSTEMS

WARNING: For electronic ignition models requiring power supply – a qualified, licensed electrician must install power supply. An outdoor NEMA rated GFCI Receptacle outlet should be installed within the interior of the enclosure above grade to supply power to system.

1. **STOP!** Read all the safety information and warnings in the Installation Manual before attempting to light fire feature.
2. Any cover must be removed prior to operation of burner and must remain off during operation.
   Danger: Fire or Explosion Hazard. If you smell gas, shut off gas to the appliance, extinguish any open flame. If odor continues, leave the area immediately. After leaving the area, call your gas supplier or fire department. Failure to follow these instructions could result in fire or explosion, which could cause property damage, personal injury or death.
3. Confirm that your Natural Gas or Liquid Propane supply to the appliance is open or on.
4. Before lighting, visually inspect fire feature and remove any accumulated leaves or other combustible debris.
5. If you do not smell gas, use the key to turn the key valve or gas control valve to the ON position by turning the key to the left.
6. Turn on power to the fire feature with switch, button, or remote. Within 10 seconds of power application Pilot Flame should be lit and visible. Once the pilot is lit, the main burner will ignite shortly after. For Push Button: Press push button ignition and listen for clicking noise which indicates electrode is firing. Gas should ignite after a few clicks.
7. Use key valve to adjust flame to desired height.

TURNING OFF YOUR ELECTRONIC IGNITION SYSTEMS

1. Turn off power to fire feature –with remote control or wall switch.
2. Turn key valve to OFF position by turning key to the right.
3. If using LP bottle/tank – turn bottle/tank to CLOSED position.
4. Verify flame is OUT.
5. After allowing for ample cooling time, cover the fire feature with waterproof/weatherproof cover.

WARNING: FOR REMOTE CONTROL USE: To prevent unwanted startup turn off power to the appliance when not in use.

WARNING: If fire feature fails to turn off completely (small flames still visible), turn off gas supply using the main valve by your meter, and contact your gas supplier or qualified technician.

WARNING: For electronic ignition systems, which have an extended or detached valve box, the area in which the valve box is installed must conform with all installation requirements, including, but not limited to location, construction, venting and local codes. Failure to do so may result in property damage, personal injury, or death.

FIRESTORM STEEL GAS LOG OWNER INFORMATION AND INSTALLATION

Thank you for your purchase of a FireStorm® Steel Gas Log from Warming Trends. We appreciate your business and hope that you enjoy your FireStorm for many years to come!

BURNER SYSTEM INSTALLATION AND OPERATING INSTRUCTIONS

Please read and follow the entire Warming Trends Owner's Guide and Instruction Manual to install and operate your outdoor gas burner system. **During the installation of your burner system, for safe lighting, orient the burner so that one end of it is easily reachable while operating the key valve.**

Please follow all instructions of this Owner's Manual regarding the use of approved media coverage over the burner. The approved media will form a bed upon which to place the FireStorm Steel Gas Log. It is recommended that a flat bed of media two inches wider and longer than the FireStorm Steel Gas Log be formed.

INSTALLATION OF THE FIRESTORM STEEL GAS LOG

Your FireStorm Steel Gas Log may have sharp edges. Please handle carefully or wear appropriate gloves whenever handling gas log.

Once your approved media has been installed, place your FireStorm Steel Gas Log over the burner so that the burner is centered underneath it. Your steel log has a "lighting opening" at each end to aid in lighting the burner. (See Figure 1 below). Orient the steel log so that one end of the log is near the key valve. Press down upon the log to seat the log in the media to create a level and stable foundation. Adjust media as necessary.

Adjust your media so that the tip of the jet nearest the end of the log to be used for lighting is exposed. Use this jet for lighting the burner pursuant to Steps 6 and 7 below.

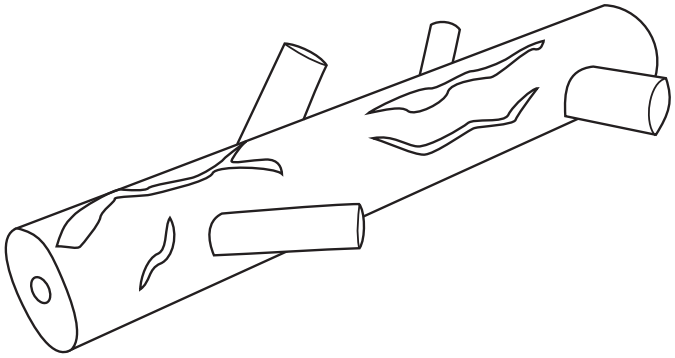

LIGHTING AND TURNING OFF YOUR MATCH LIT FIRESTORM STEEL GAS LOG SYSTEM

These instructions supplement the Lighting Instructions within your Owner's Manual related to Turning On Your Match Lit System. Light your FireStorm Steel Gas Log using a "lighting opening" to access your burner as described below.

TURNING ON YOUR MATCH LIT SYSTEM

1. **STOP!** Read all the safety information.
2. Any cover must be removed prior to operation of burner or appliance and must remain off during operation. **Danger: Fire or Explosion Hazard. If you smell gas, shut off gas to the appliance, extinguish any open flame. If odor continues, leave the area immediately. After leaving the area, call your gas supplier or fire department. Failure to follow these instructions could result in fire or explosion, which could cause property damage, personal injury, or death.**
3. Confirm that your main Natural Gas or Liquid Propane supply to the appliance is open. **Do not open your key valve or gas control at this time.**
4. Before lighting, visually inspect fire feature and remove any accumulated leaves or other combustible debris.
5. Locate key valve or gas control valve controlling gas supply to your appliance.
6. **Locate the jet tip nearest the "lighting opening" described above** that can be easily accessed while operating key valve or gas control without reaching across other jets or the burner. Reorient burner if necessary to allow such access.
7. Place a long reach lighter through the "lighting opening" of the gas log slightly above or on the tip of the jet located in Step 6 above. (See Figure 1). Do not use a match or cigarette lighter.
8. While holding the flame on or slightly above the jet tip as described in Step 7 above, **slowly** turn the key valve or gas control knob **slightly** to the left to allow a minimal flow of gas to the burner and light the selected jet. While attempting to light jet, do not substantially increase gas supply. Excessive flow of gas before jet is lit can cause pooling of gas and result in sudden flare up. **Failure to follow these instructions could result in fire or explosion, which could cause property damage, personal injury, or death.**
9. Once the selected jet (or other jets) is lit, continue to keep any body parts from above the pit or burner and slowly turn the key valve or gas control knob further to the left to increase the flow of gas to the burner. The other jets of the burner should ignite.
10. If the flame will not stay lit after several attempts, turn the key valve or gas control to the off position and call your local technician or gas supplier for service prior to re-attempting to operate your appliance.
11. Once lit, use the key valve or gas control to adjust the flame to the desired height.

TURNING OFF YOUR MATCH LIT BURNER

1. Use key to turn valve to OFF position by turning the valve to the right.
2. Verify flame is OUT.
3. If using LP bottle/tank, turn bottle/tank to CLOSED position.
4. Allow to cool completely, then cover the fire feature with waterproof/weatherproof cover.

APPEARANCE

Your steel log should patina over time by forming a layer of rust or oxidation. The coloring may change and the log will look more natural. Each log develops a unique patina pattern based upon use and weather conditions. Heat will also create distinctive color changes to your log's surface.

CLEANING STEEL LOG

Soot may build up along the openings in the log or on its surface in general. Annual cleaning is recommended. However, if soot restricts or reduces normal flame performance, clean openings immediately. **Prior to any cleaning or handling, wait for log to cool completely and then remove the log from the system.** Soot is then easily removed by spraying the log with water or by lightly brushing with a plastic brush. Do not allow water or soot to fall into burner

GENERAL MAINTENANCE

Any guard or protective device removed for servicing must be replaced prior to operating the appliance.

Installation and repair should be done by a qualified technician. Appliances should be inspected prior to each use and inspected at least once annually by a qualified gas appliance service professional.

Ensure gas and power (if applicable) are shut off and fire feature is cool before servicing.

Keep fire feature covered at all times when not in use.

Keep any debris out of appliance - clean as needed. If debris is found, remove before lighting system.

JET ORIFICE CLEANING

Annual inspection and cleaning of the fire feature is recommended. If at any time the flames exhibit any abnormal shapes or behavior or if burner fails to ignite properly, the holes located in the base of the gas jet orifices may require cleaning. The appliance can be cleaned by carefully removing the logs and media to allow access to burner. Use a brush to carefully remove dust, spider webs, and loose particles. Periodical inspection by a qualified service technician of the air-intake on the side of the jet is recommended to ensure your fire feature performs properly.

If a jet is clogged, use a wire or small puncture tool and carefully insert in jet. Tool should be the size of a small paper clip.

PILOT ASSEMBLY/THERMOCOUPLE CLEANING OF SOOT

Every six months or as needed, remove media, lava rock, or glass from around the pilot assembly. Clean the thermocouple of any soot using soft brush. Be careful not to damage the igniter element. Be sure when returning your media to the feature to avoid over covering the jets as mentioned on page 9 and the pilot assembly as mentioned on page 9.

Once pilot assembly is clean, inspect to see flame that covers 3/8" to 1/2" of the thermocouple. Cleaning of pilot gas orifice may be required by removing pilot hood and removing orifice and cleaning out orifices from debris, soot, or anything that may be preventing gas flow from exiting the pilot gas orifice.

WARNING:
Fire feature should be inspected by user prior to each use and inspected at least once annually by a qualified gas appliance service professional.

TROUBLESHOOTING

IGNITION SYSTEMS

Below are some potential causes and countermeasures to the symptoms.

- **No Pilot Flame - Pilot sparks but pilot won't light.**
  - Air in the gas line - If this is a new install, it may take several attempts to purge the air.
  - Debris is in the gas line - Clear the gas line.
  - Water/Moisture is in the gas line - Clear the gas line.
  - Incorrect Gas pressure - Confirm proper gas pressure.
  - Pilot gas orifice is dirty - Remove the pilot head and clean.
  - Wind conditions might be too severe.

- **Pilot lights but burner will not light.**
  - Gas pressure is incorrect - Confirm proper gas pressure.
  - Small pilot flame - Remove the pilot head and clean pilot gas orifice.
  - Dirty thermal sensor - Clean using soft brush.
  - CROSSFIRE™ burner has an obstruction - Confirm there is no debris blocking gas orifice jets in burner, purge water and air from gas lines or in the burner, and confirm there is no debris in gas lines.

- **Burner Turning Off Unexpectedly.**
  - Improperly applied media - Make sure your media is not covering the pilot assembly and that your logs are not placed over or too near the wind cage.
  - Gas pressure is incorrect - Confirm proper gas pressure by checking at the gas stub to the feature and the Gas Inlet Pressure.
  - Wind conditions – Confirm the burner is properly located 4 - 6" inside the feature, and be sure the wind conditions are not too severe for safe use.

- **Fire Feature is Making a Whistling Sound.**
  - Flex line issue - Confirm the correct size flex line is installed and there are no kinks or tight bends in the line.
  - Gas pressure is in correct - If the whistling is coming from the jets, confirm the gas pressure is within the ranges recommended on the Gas Pressure Inlet chart provided on page 7. Adjust as needed.

Please contact your retailer or certified technician for service and repair if these suggestions do not solve the issue. If replacement parts are required – contact your retailer or licensed technician for authorized replacement parts. Warranty is null and void if unauthorized parts are used.

WARRANTY

FULL LIFETIME WARRANTY FOR CROSSFIRE® BURNERS

Warming Trends warrants that each Warming Trends® Crossfire® and other jetted-flame-brass-burners (each as "Burner") is free from defects in materials and workmanship and conforms to its specifications, which are available upon request.

We offer a lifetime, full warranty for our Burners, regardless of ownership, beginning on the date of purchase (**"Warranty Period"**). This Full Warranty is transferable, but we reserve the right to require proof of ownership for any transferred burners including proof that the Burner was not acquired through improper means or unauthorized re-sellers. During the Warranty Period, Warming Trends provides repair and exchange services for the Burners, without charge. If a Burner does not function as warranted during the Warranty Period and, after a reasonable number of attempts, Warming Trends is unable to either 1) make it do so or 2) replace it with one that is at least functionally equivalent, you may return it to Warming Trends and your money will be refunded.

The warranty stated above will not apply to the extent that there has been misuse or use contrary to specifications or the appropriate user or operating manual, installation defect, accident, modification, unsuitable physical or operating environment, operation in other than the specified operating environment (e.g., outdoor burners should only be used outdoors) improper maintenance by you, or failure caused by a product for which Warming Trends is not responsible. With respect to Burners, the warranty is voided by removal or alteration of any identification labels or marks on any Burner or part.

ITEMS NOT COVERED BY WARRANTY

Other than as expressly stated above, Warming Trends does not warrant uninterrupted or error-free operation of any Burner or that Warming Trends will correct all defects.

Warming Trends does not warranty any services related to our Burners, including installation, unless we provided those services to you. You may have warranty rights from the service provider, but we make no representations or warranties express or implied regarding any third-party service provider.

This warranty also does not apply to any fire logs (including the FireStorm® Steel Log) or any of the electronics used in connection with our Burners, which may be covered by separate warranties with different terms.

FULL & LIMITED IGNITION SYSTEMS WARRANTIES

PUSH BUTTON IGNITION SYSTEMS: There is no warranty offered on any push button ignition system.

ELECTRONIC IGNITION SYSTEMS:

Residential Installations:

24VIK and 3VIK systems are fully-warranted for one (1) year from the date of purchase and, thereafter, a limited warranty for two (2) years from date of purchase. In the event a system must be replaced due to a defect/malfunction of the system, Warming Trends® will repair or replace the system at no cost for the first year. In the event a system fails after the first year from date of purchase and within two years from date of purchase, Warming Trends will repair or replace the system for a cost of 50% of the current list price. This warranty does not cover labor costs.

P24VIK systems purchased ON OR BEFORE April 15, 2018 are fully-warranted for one (1) year from the date of purchase and, thereafter, a limited warranty for two (2) years from date of purchase. In the event a system must be replaced due to a defect/malfunction of the system, Warming Trends will repair or replace the system at no cost for the first year. In the event a system fails after the first year and within two years of date of purchase, the cost for a replacement system is at a discount rate of 50% of the current listed price. This warranty does not cover labor costs.

P24VIK Systems purchased AFTER April 15, 2018 are fully-warranted for three (3) years from date of purchase. In the event a system must be replaced due to a defect/malfunction of the system, Warming Trends will repair or replace the system at no cost for the first three years. This warranty does not cover labor costs.

Commercial Installations:

24VIK and 3VIK systems are fully-warranted for one (1) year from date of purchase. In the event a system must be replaced due to a defect/malfunction of the system, Warming Trends will repair or replace the system at no cost. This warranty does not cover labor costs.

P24VIK Systems are fully-warranted for one (1) year from date of purchase. In the event a system must be replaced due to a defect/malfunction of the system, Warming Trends will repair or replace the system at no cost for 12 months from the date of purchase. This warranty does not cover labor costs.

MERCURY IGNITION SYSTEM

Residential Installations:

Mercury Manual Ignition systems are fully-warranted for three (3) years from date of purchase. In the event a system must be replaced due to a defect/malfunction of the system, Warming Trends will repair or replace the system at no cost for the first three years. This warranty does not cover labor costs.

Commercial Installations:

Mercury Manual Ignition systems are fully-warranted for one (1) year from date of purchase. In the event a system must be replaced due to a defect/malfunction of the system, Warming Trends will repair or replace the system at no cost for the first year. This warranty does not cover labor costs.

Problems or defects in the functioning of the systems due to gas plumbing or electrical installed by others are not covered by any warranty offered by Warming Trends.

No dealer, distributor, or other person has the authority to represent or warrant a Warming Trends product beyond the terms contained within this warranty, and Warming Trends assumes no liability for such warranty representations. Any questions concerning this warranty should be directed to the Warming Trends corporate office or via email to legal@warming-trends.com.

ALL BURNERS AND ELECTRONICS MUST BE COVERED WHEN NOT IN USE OR WARRANTY IS NULL AND VOID

While some of our warranties are passed-through or provided in cooperation with third-parties, Warming Trends will honor the warranties for all products purchased from us, regardless of the manufacturer but we may coordinate internally with the necessary third-parties in order to do so.

YOUR RIGHTS UNDER STATE LAW

This Warranty gives you specific legal rights, and you may also have other rights which vary from state to state. You may find this information from the Federal Trade Commission helpful in understanding your rights, but we recommend you speak to your attorney regarding your specific situation and the laws in your state or jurisdiction. https://www.consumer.ftc.gov/articles/0252-warranties

PROP 65 WARNING

WHAT IS "PROP 65"?

Proposition 65 ("Prop 65") is a California law which requires businesses to provide warnings to Californians about significant exposures to chemicals that cause cancer, birth defects or other reproductive harm. These chemicals can be in the products that Californians purchase, in their homes or workplaces, or that are released into the environment. Prop 65 enables Californians to make informed decisions about their exposures to these chemicals.

Prop 65 also prohibits California businesses from knowingly discharging significant amounts of listed chemicals into sources of drinking water.

Prop 65 requires California to publish a list of chemicals known to cause cancer, birth defects or other reproductive harm. This list, which must be updated at least once a year, has grown to include approximately 900 chemicals since it was first published in 1987.

Prop 65 became law in November 1986, and is also known as the Safe Drinking Water and Toxic Enforcement Act of 1986. Prop 65 does not apply to products sold outside of the state of California. For more info on Prop 65, go to: www.p65warnings.ca.gov For a fully updated list of all the chemicals and compounds that are known to the State of California to cause cancer or reproductive toxicity, go to: https://oehha.ca.gov/proposition-65/proposition-65-list.

WARNINGS

Lead: Can cause birth defects or other reproductive harm. Lead can be found in brass fittings. View the fact sheet at www.p65warnings.ca.gov

Carbon Monoxide: Carbon monoxide is a colorless, odorless, and poisonous gas. It is formed during the combustion of various fuels. View the fact sheet at www.p65warnings.ca.gov

Bisphenol A: BPA is a widely used chemical that be found in linings, plastics, and other materials. It can cause harm to the female reproductive system. View the fact sheet at www.p65warnings.ca.gov

Furniture Product Exposure: Some furniture products can expose you to chemicals which are known to the State of California to cause cancer or birth defects or other reproductive harm. View the fact sheet at www.p65warnings.ca.gov

Want to see more? View all of the Prop 65 fact sheets at www.p65warnings.ca.gov

MORE INFO ON PROP 65

If you have specific questions on the administration or implementation of Proposition 65, you can contact OEHHA's Proposition 65 program at P65.Questions@oehha.ca.gov, or by phone at (916) 445-6900.

For enforcement information, contact the California Attorney General's Office at (510) 622-2160, or visit https://oag.ca.gov/prop65.

Note: The information provided is for informational purposes only and does not constitute legal advice. If you have any concerns about Prop 65 or how it may apply to our products, please consult your attorney.

CONTACT US

Replacement Parts, Questions, or Need Assistance? Our team is happy to help.

Call our Flame Specialists at (303) 346-2224 or email us at Orders@Warming-Trends.com.

For more information about Warming Trends products, please visit us at www.Warming-Trends.com

SCAN QR CODE FOR AVAILABLE RESOURCES ON WARMING-TRENDS.COM